CITEL

9.4 edition

Surge Protection

Electrical Installations

Photovoltaic

LED lighting

Telecom

Data

Radiocommunication

Gas Discharge Tube

General Catalog
9-4 edition

CITEL

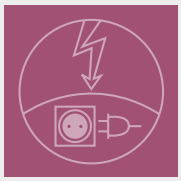

DIN rail AC Power Surge Protectors

Photovoltaic Surge Protectors

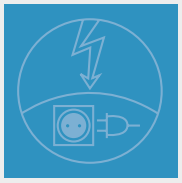

AC Power Surge Protectors

Led System Surge Protectors

Telephone Line Surge Protectors

Data Line Surge Protectors

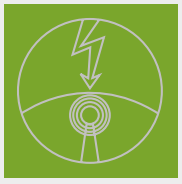

High Frequency Coaxial Surge Protectors

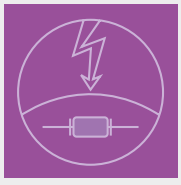

Gas Discharge Tube

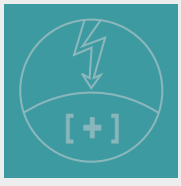

Miscellaneous

An international network....

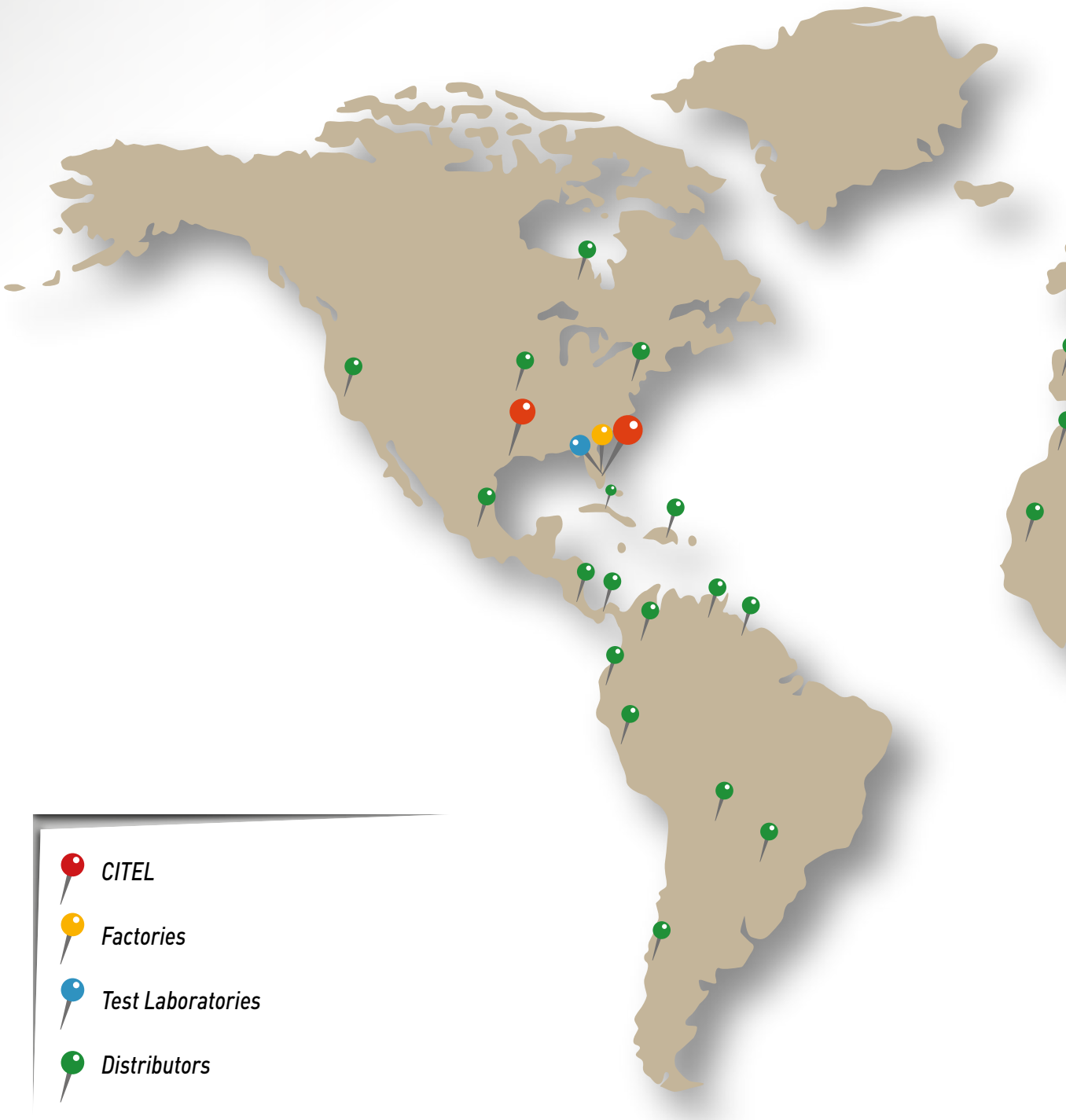

France

Sèvres : - Headquarters
- General management
- Administrative and Financial Department
- Sales division : France and Export
- Communication and Marketing Department
- Research and Development

Reims - Production and Shipment

Subsidiaries

Citel Electronics GmbH - Bochum (Germany)
Citel Inc. - Miramar (USA)
Shanghai Citel Electronics Co., Ltd - Shanghai (China)
OOO Citel Vostok - Moscow (Russia)
Citel India - New Delhi (India)
Citel Thailand - Bangkok (Thailand)

Distributors in more than 50 countries

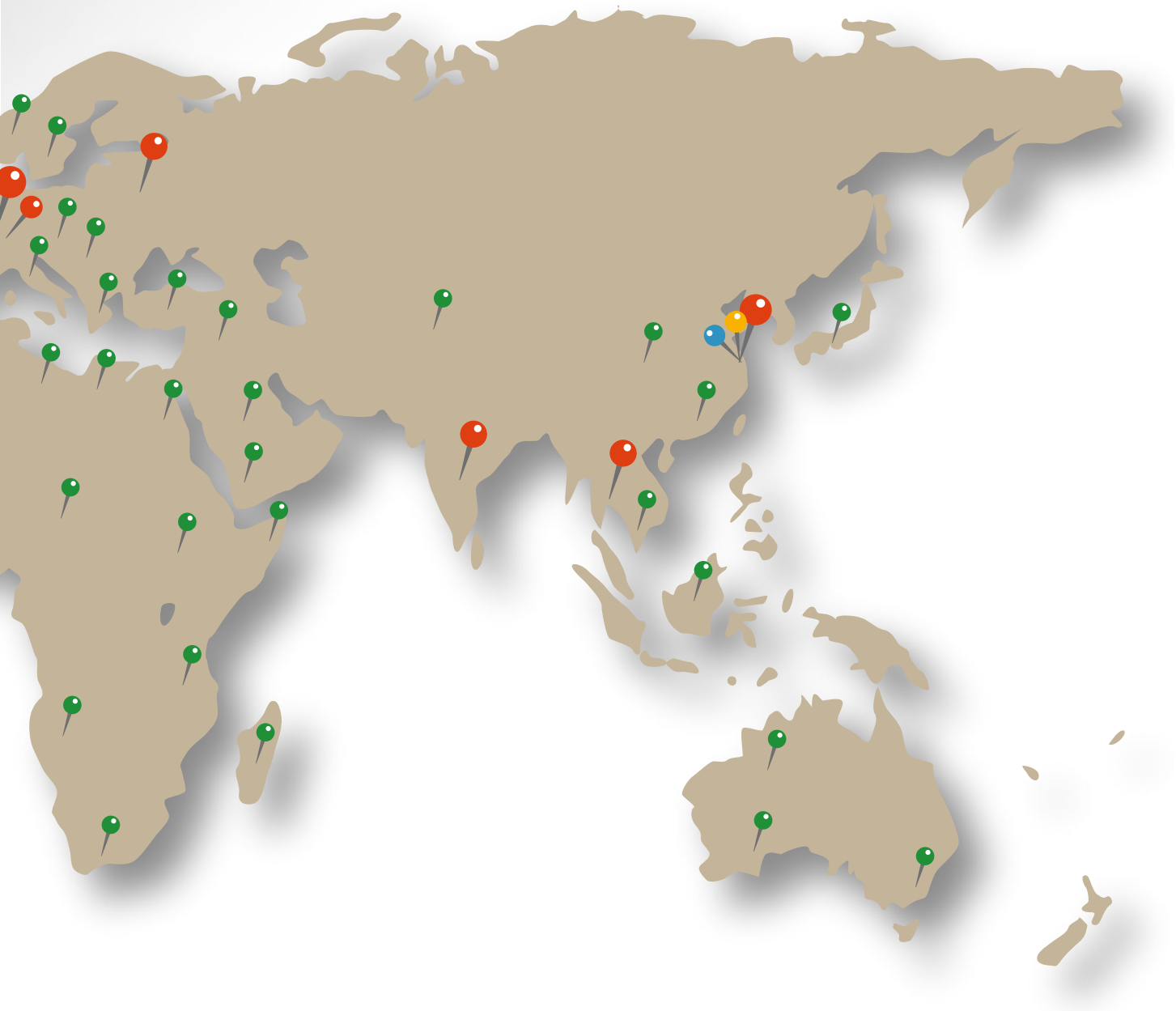

Citel, the company

A long history.....

1937	CITEL founded. Manufacture of tubular light bulbs.
1944	Manufacture of the first Surge Arrester.
1976	CITEL acquired by the present Management. Light bulb manufacturing discontinued.
1985	CITEL America founded in Miami.
1988	CITEL Electronics GmbH founded in Düsseldorf.
1992	Acquisition of CLAUDE gas tube line from GTE Sylvania at Reims, and OBSTA.
1996	Establishment of Shanghaï CITEL Electronics Co., Ltd.
2000	New technology for AC surge protectors (VG series).
2005	New JV for coaxial surge protectors production CITEL Tong Da.
2007	AC surge protectors become the best-selling range
2010	CITEL Russia founded in Moscow
2012	CITEL India founded in New Delhi
2012-2013	Implementation of a test laboratory in Reims
2017	Citel Thailand founded in Bangkok
2017	New 240 kA surge generator in Citel Shanghaï

afaq ISO 9001 Qualité AFNOR CERTIFICATION

Testing labs.....

In order to test its products internally for standards compliance and to evolve toward greater reliability, CITEL has several test sites (France, USA, China) equipped with:

- Current impulse generators up to 100 kA - 8/20µs
- Current impulse generators up to 100 kA - 10/350µs
- 1.2/50-8/20µs hybrid wave generators up to 20 kV/10 kA
- 400 Vac 3-phase low voltage network-Isc 1.5 kA/phase for coupling with current impulse
- HT fast digital oscilloscopes
- Materials for test environment (damp heat, climate, shock)
- Ultra-fast camera

The G100K test generator in Reims (France) can produce exceptionally high impulse current of 100 kA and is used for testing structural lightning protection systems as well as Type 1 surge protectors.
in 2017, Shanghai lab has been equipped with an very high energy surge generator able to produce 240 kA in 8/20µs impulse.

The specialist in overvoltage protection

CITEL's only business and expertise is to protect networks and equipment from transient overvoltages, in particular those induced by lightning. For this, CITEL manufactures two complementary products lines:

- ***Gas discharge tubes*** (or GDTs) are the basic passive components used to protect telephone exchanges and equipment from voltage surges; they are generally installed on telephone networks by telecommunication operators.

- ***Surge Protection Devices*** (or SPDs) are units combining several protection components. They may be used by the installer or by the end customer. They are designed to be incorporated in an installation to protect all electric, electronic, and data-processing equipment from transient overvoltages.

Transient overvoltages

The users of electric, electronic equipment and telephone and data-processing systems must face the problem of keeping this equipment in operation in spite of the transient overvoltages induced by lightning.

There are several reasons:

Integration of electronic components makes the equipment more vulnerable.
Interruptions of service are unacceptable.
Data transmission networks cover large areas and are exposed to more disturbances.

The origin of overvoltages

Transient overvoltages have four main causes :

- Lightning
- Industrial and switching surges
- Electrostatic discharges (ESD)
- Nuclear electromagnetic pulses (NEMP)

Overvoltages differ in amplitude, duration and frequency.

While protection against power surges caused by lightning or handling will require the use of surge protectors systems, «ESD» or «IEMN» issues are far more specific and require other adapted solutions.

Lightning

Lightning, investigated since Benjamin Franklin's first research in 1749, has paradoxically become a growing threat to our highly electronic society.

Lightning formation

A lightning flash is generated between two zones of opposite charge, typically between two storm clouds or between one cloud and the ground.

The flash may travel several miles, advancing toward the ground in successive leaps: the leader creates a highly ionized channel. When it reaches the ground, the real flash or return stroke takes place.

A current in the tens of thousands of Amperes will then travel from ground to cloud or vice versa via the ionized channel.

Direct effects

At the moment of the discharge, there is an impulse current flow that ranges from 5,000 to 200,000 Ampere peak, with a rise time of about few microseconds. This direct effect may be considered as a small factor in damaging electric and electronic systems, because it is highly localized.

The best protection is still the classic lightning rod or Lightning Protection System (LPS), designed to capture the discharge current and conduct it to a particular point.

Indirect effects

There are three types of indirect electrical effects :

Impact on overhead lines

Such lines are very exposed and may be struck directly by lightning, which will first partially or completely destroy the cables, then cause high surge voltages that travel naturally along the conductors to line-connected equipment. The extent of the damage depends on the distance between the strike and the equipment.

Rise in ground potential

The flow of lightning in the ground causes earth potential increases that vary according to the current intensity and the local earth impedance. In an installation that may be connected to several grounds (e.g. a link between buildings), a strike will cause a very large potential difference and equipment connected to the affected networks will be destroyed or severely disrupted.

Electromagnetic radiation

The flash may be regarded as an antenna several miles high carrying an impulse current of several tenth of kilo-amperes, radiating intense electromagnetic fields (several kV/m at more than 1 km).
These fields induce strong voltages and currents in lines near or on equipment. The values depend on the distance from the flash and the properties of the link.

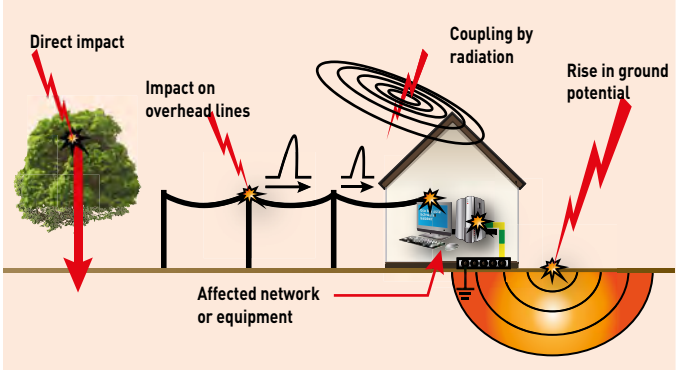

Industrial and switching surges

This term covers phenomena caused by switching electric power sources on or off.

Surges due to switching operations are caused by:

- Starting motors or transformers
- Neon and sodium light starters
- Switching power networks
- Switch «bounce» in an inductive circuit
- Operation of fuses and circuit-breakers
- Falling power lines...

These phenomena generate transients of several kV with rise times in the order of a few microseconds, disturbing equipment in networks to which the source of disturbance is connected.

Electrostatic overvoltages (ESD)

Electrically, a human being has a capacitance ranging from 100 to 300 picofarads, and can pick up a charge of as much as 15kV by walking on a carpet, then touch some conducting object and be discharged in a few nanoseconds, with a current of about ten Amperes. All integrated circuits (CMOS, etc.) are quite vulnerable to this kind of disturbance, which is generally eliminated by shielding and grounding.

NEMP phenomena

(Nuclear ElectroMagnetic Pulses)
A high-altitude nuclear explosion, above the atmosphere, creates an intense electromagnetic field (up to 50 kV/m in 10ns), radiated to a ground area up to 1200 kilometers in radius.

In the ground, the field induces very large transient overvoltages in power and transmission lines, antennas, etc., destroying the terminal equipment (power circuit, computer terminals, telephone equipment, etc.).

The field rise may reach several kV/ns. While it is difficult to eliminate all overvoltages induced by an electromagnetic pulse, there are ways to reduce them and strengthen the systems to be protected. In spite of the amplitude of the phenomenon, protection can be provided by shielding and filtering/surge protection adapted to NEMP.

Effects of overvoltages

Overvoltages have many types of effects on electronic equipment; in order of decreasing importance:

Destruction

- Voltage breakdown of semiconductor junctions
- Destruction of bonding of components
- Destruction of tracks of PCBs or contacts
- Destruction of triacs/thyristors by dV/dt.

Interference with operation

- Random operation of latches, thyristors, and triacs
- Erasure of memory
- Program errors or crashes
- Data and transmission errors

Premature ageing

Components exposed to overvoltages have a shorter life.

Surge Protection devices

The Surge Protection Devices (or SPD : this is a generic name for any device to protect from voltage surges) is a recognized and effective solution for the overvoltage problem. For greatest effectiveness, however, it must be chosen according to the risk and installed in accordance with the applicable standards.

Standards

Because of the diversity and importance of transients, standards organizations have created specifications for testing the effects of overvoltages on equipment.

The phenomena were first characterized and a series of standardized waves created (1.2/50µs voltage wave and 8/20µs and 10/350µs current waveforms), then a number of standards defining surge arrester performance were issued, among them :

Surge Protectors for Low-Voltage installations :

- NF EN 61643-11 (France)
- DIN EN 61643-11 (Germany)
- EN 61643-11 (Europe)
- UL 1449 (USA)
- IEC 61643-11 (International)

Surge Protectors for Telecom equipment :

- IEC 61643-21 (International)
- ITU-T recommendations K11, K12, K17, K20, K21, K36 (International)
- UL 497 A/B (USA)

CITEL

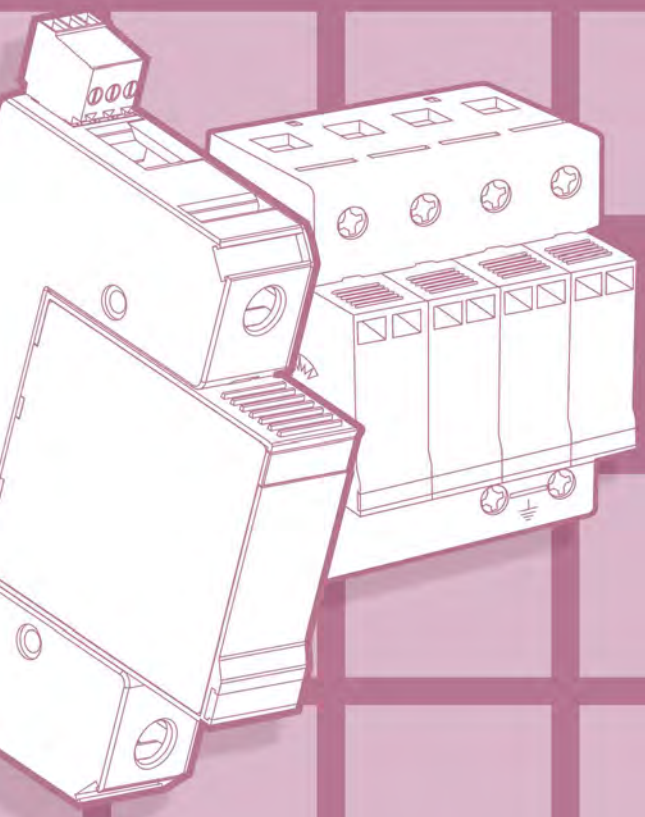

DIN RAIL AC

Surge Protectors

DIN Rail AC power Surge Protectors

CITEL DS AC power Surge Protective Devices (SPD) are designed to meet all your surge protection needs for any low voltage installation.

These DIN rail mounted surge protectors are easy to install in any standardized distribution panel or control cabinets. The SPDs are equipped with a thermal disconnection device and provide real-time fault indicators thus allowing complete operational safety.

DS surge protectors are available with several protection circuits to comply with even the most demanding installations and standards compliance requirements.

CITEL AC power surge protectors offer three levels of surge protection capacity that correspond to the different IEC or EN classes, i.e. Class I, II and III.

Standards

To ensure efficient and reliable performances, all CITEL's AC power surge protectors comply with the leading standards.
Relevant standards in the AC surge protection field could be split into 3 types of documents:

«Product» standards :
These documents address the type of tests the SPD manufacturer must apply on its devices :
- Europe : EN 61643-11
- Germany : DIN EN 61643-11
- International : IEC 61643-11
- USA : UL1449-4ed
- France : NF EN 61643-11

«Installation» standards :
These documents give the main information about AC power surge protectors and its proper installation:
- International : IEC 61643-12 guide
- Europe : CLC/TS 61643-12
- USA : IEEE C62-41
- France : UTE C15-443 guide

«Selection» standards :
They define the basic rules to select the surge protector in accordance with the general electrical code :
- Germany : DIN VDE 0100 part 443 and 534
- International : IEC 60364-4-433 and 5-534
- France : NF C 15-100 sect. 443 and 534

Operating principle

CITEL surge protectors for AC network are based on zinc metal-oxide varistors (MOV), the best compromise between a fast response time (<25 ns) and a high discharge current capacity, which are the main parameters to provide efficient protection.
Nevertheless the end of life of these varistors must be absolutely monitored thus requiring the systematic use of built-in thermal disconnection devices (see «Disconnection devices»).

DS40 surge protector diagram

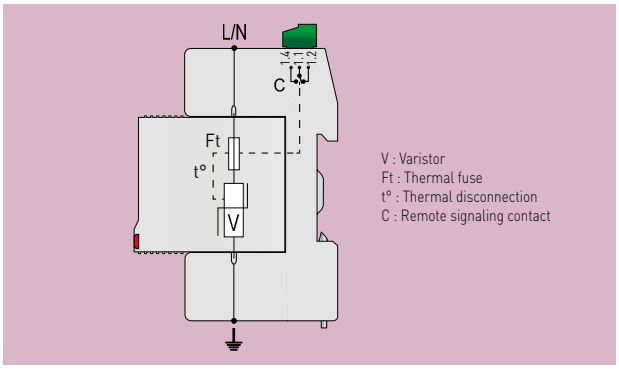

VG technology by CITEL

In order to improve the surge protection efficiency, CITEL has developed a patented technology which combines a high energy varistor (MOV) network and a specific gas tube (GSG). This specialized circuit incorporated in the «VG» Type "1+2+3" surge protectors (DS150VG, DS250VG, DUT250VG) or Type "2+3" (DS40VG) can achieve better performance of:

- Protection level,
- Life duration (due to the suppression of leakage current),
- Continuous operation and power quality (no follow current)
- End of life behavior.

For instance, these features allow it to reach, even with a single stage of surge protection, the same protection efficiency as a double stage association (Type 1, Type 2 and Type 3 SPDs) (see page 13).

Surge protectors parameters

Surge protectors are defined by a serie of electrical specifications which will help the user to select the right protection specific to their installation:

Operating voltage - Uc

The maximum continuous operating voltage (MCOV) Uc is the maximum r.m.s voltage which may be applied continuously to the SPD.

Temporary overvoltage - U_T

The temporary overvoltage U_T (TOV) is the maximum AC value the surge protector can withstand during 5 seconds, without failure. In many cases , this parameter U_T is equal or superior to Uc.

An additional test is required for TT AC system, to simulate a temporary «high voltage» overvoltages (TOV) between Neutral and PE (application of 1200 Vac, 300 A for 200 ms): the compliance with this test requires the use of the CT2 diagram (specific gas tube between N and PE).

Discharge current - In and Imax

The maximum discharge current (Imax), applicable to Type 2 SPD, is the maximum impulse current 8/20 µs a surge protector can withstand without destruction .

The nominal discharge current (In) is the level of impulse current a surge protector Type 1 or Type 2 can withstand repeatedly (15 surges) without destruction.

Impulse current - Iimp

The impulse current (Iimp), used in Class I test applicable to Type 1 SPDs, is the maximum impulse 10/350 µs current a surge protector can withstand without destruction. This test simulates the effect, on AC power surge protectors, of a direct lightning strike on an installation.

Total discharge current - Itotal

Total discharge current flowing in the PE or PEN conductor of a multipolar surge protector.

Specific energy - W/R

Energy discharged during the flow of the surge current Iimp, during the class I test. Expressed in KJ/ohm.

Open circuit voltage - Uoc

This parameter is used only for Class III test, applicable to Type 3 SPD and consists of the injection of a combination wave (1.2/50 µs in open circuit - 8/20 µs in short circuit).

Level of protection - Up

Maximum residual voltage of the surge protector during an 8/20µs current waveform shot (at the maximum of the In or Iimp declared current) or during a 1,2/50µs @ 6kV voltage waveform shot test (if required)..

Level of protection at In - Up-in

Residual voltage of the surge protector during an 8/20µs current waveform shot at a determined value (In or Iimp). This value is lower than the Up Protection level for all the VG type surge protector.

Short circuits capability - Isccr

The surge protection and its associated disconnector (Fuse) are tested at a maximal short circuit current value (ex: 25kA) : This Isccr value needs to be higher than the short circuit value of the network at the installation point.

Follow on current extinction capability - Ifi

This criteria is only devoted to surge protection using the "air gap" technology:once they have fired, these surge protectors conduct part of the network current (follow on current) and need to interrupt it. This behavior does not concern low voltage surge protector using Metal Oxide Varistor technology.

DIN Rail AC power Surge Protectors

Type of surge protectors

The AC power surge protectors are split into 3 categories by IEC 61643-11 and EN 61643-11 standards, with the following 3 classes of tests. These different tests depend on the location of the surge protector in the AC network and on the external conditions.

Type 1 surge protectors

Type 1 surge protectors are designed to be installed where a direct lightning strike risk is high, especially when the building is equipped with external lightning protection system (LPS or lightning rod). In this situation, EN 61643-11 and IEC 61643-11 standards require the Class I test to be applied to surge protectors : this test is characterized by the injection of 10/350 µs impulse current in order to simulate the direct lightning strike consequence. Therefore these Type 1 surge protectors must be especially powerful to conduct this high energy impulse current.

Type 2 surge protectors

Type 2 surge protectors are designed to be installed at the entrance of the installation, in the main switchboard, or close to sensitive terminals, on installations without LPS (lightning rods). These protectors are tested following the Class II test from IEC61643-11 or EN61643-11 standards and based on 8/20 µs impulse current injection.

Type 3 surge protectors

In case of very sensitive or remote equipment, secondary stage of surge protectors is required : these low energy SPDs could be Type 2 or Type 3 (see «Coordination of surge protector» page 19).
Type 3 SPDs are tested with a combination waveform (1,2/50 µs - 8/20 µs) following Class III test).

Surge protector combination

Surge Protectors incorporating VG technology provide protection equivalent to a coordination of a type 1 + type 2 + type 3 surge protector.
Advantages: reduces the cost and time of installation. Simplifies selection (no calculation of coordination) (see page 13-14).

Different SPD types following IEC and EN standards

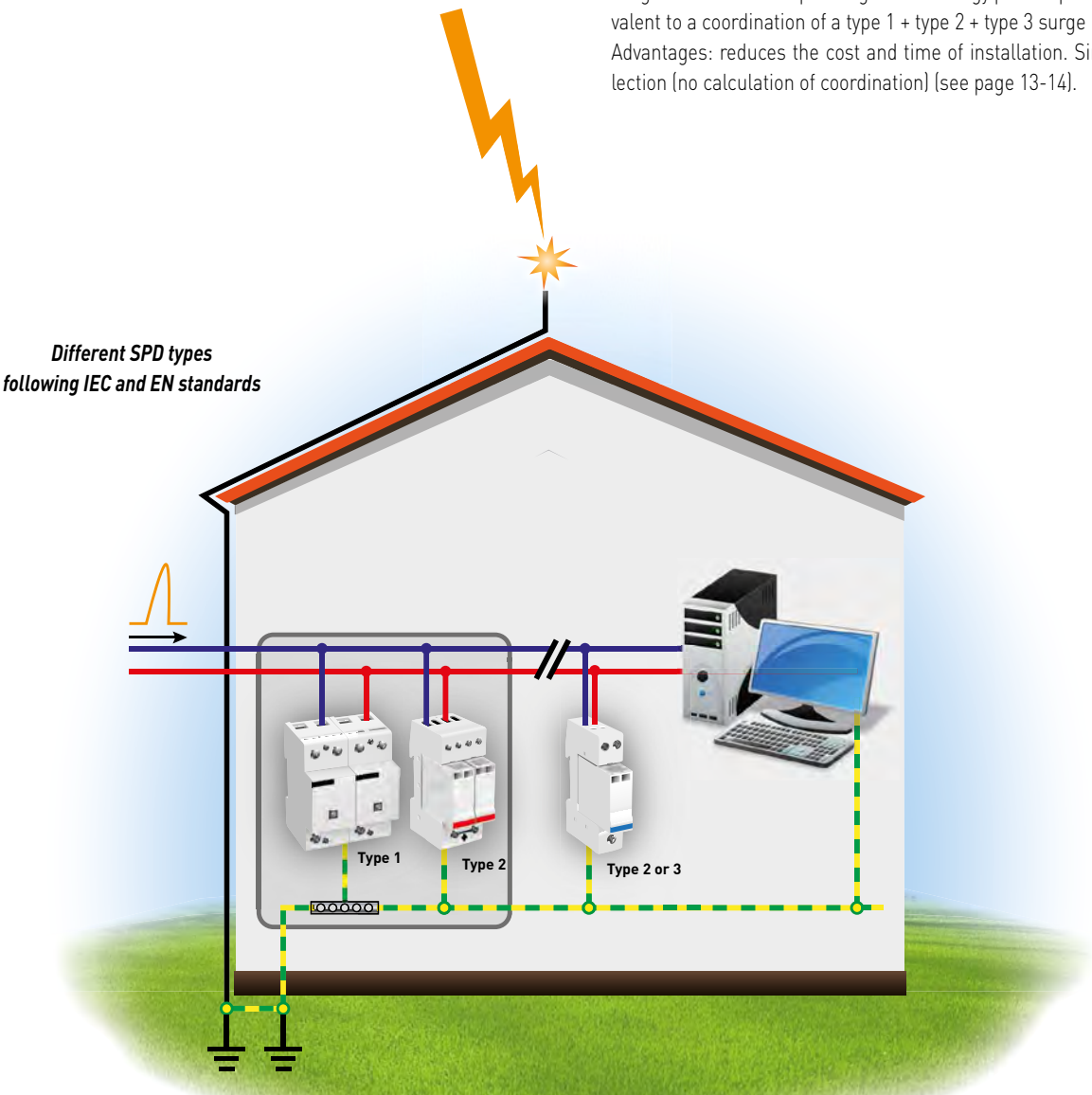

Disconnection devices

In compliance with the standards, the AC power surge protectors are equipped with external and internal disconnection devices in order to provide total safety in case of failure.

2 types of devices are necessary :
Internal thermal security which will disconnect the surge protector from the AC network in case of thermal runaway. In such a case, the user will be warned about the trouble by an indicator (mechanical or light) in front of the protector and will carry out the replacement of the defective SPD.

External electrical disconnection (fuses or breaker) to disconnect the surge protector from the AC network in case of internal short circuit, e.g. due to an excessive impulse current. The rating of the external fuses (or breaker) are in relation with the discharge capability of the SPD and the prospective short-circuit current of the installation and must be tested together with the surge protector in order to ensure compliance of the short-circuit current withstand test (Isccr parameter). To ease the selection of these components, the rating and type of fuses (or breaker) are mentioned in the datasheet and in the installation instructions of each SPD (see «associated fuses» page 15).

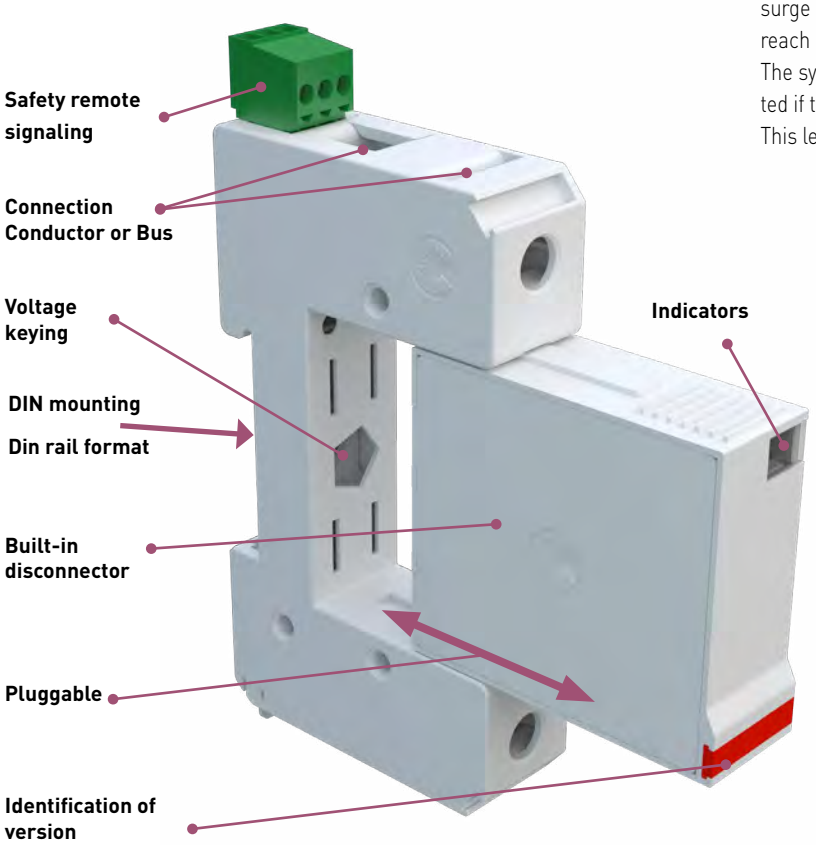

AC power Surge Protector DS41

Maintenance

DS surge protectors are designed for repetitive operation and do not require specific maintenance. Nevertheless, in case of an extreme event, a controlled end of life could occur (see above) and a maintenance operation must be performed .

Pluggable design
The design of some DS surge protectors (DS10, DS40, DS240, DS70R, DS130R) is based on the use of a pluggable module that plugs into a matching receptacle. This makes replacement, and checking very easy without impairing the protection function. On multipolar surge protectors, the possibility of replacing a single pole makes rehabilitating a surge protector less expensive.
The plug-in module is identified with a color label in relation with the type (Black = Type 1 ; Red = Type 2 ; Blue = Type 2 low power or Type 3) and are keyed for operating voltage, in order to avoid misapplications.

Signaling
DS surge protectors are equipped with a failure indicator (mechanical or light) linked to the internal thermal disconnector : in case of safety disconnection, the indicator will switch on and the SPD must be replaced.

Remote Signaling
Most DS surge protectors are available in «remote signaling» versions. This feature, which allows remote checking of the status of the surge protector, is especially important when the products are hard to reach or unsupervised.
The system consists of an auxiliary changeover contact that is activated if the surge protector module changes status.
This lets the user monitor :

- the good operation of the SPD
- the presence of the plug-in modules (if any)
- the end of life (disconnection) of the surge protector.

The remote signaling version allows the choice of signaling system appropriate to the installation (light, buzzer, automation, modem transmission...).

VG Technology for AC and Photovoltaic surge protectors

Overview

Several technologies exist on the market for surge protection or power network:

- Metal Oxide Varistor (MOV)
- Air Gap + Trigger
- MOV + Gas-filled Spark Gap (GSG) → CITEL VG Technology

VG technology

This technology is the exclusive and patented technology of CITEL based on the use of specific types of Gas tubes: GSG. These components, the result of over 75 years of experience in the gas discharge tube field, have a behavior adapted to the power network and provide robustness and working stability: their association with varistors combines the advantages of both technologies.

CITEL originally developed the "VG" technology for low voltage Type 1 surge protectors and has then extended it to Type 2 surge protectors and to Photovoltaic applications.

CITEL range using the "VG" technology:

- DS40VG: Type 2 AC Surge Protector, Imax=40 kA
- DS130VG : Type 1 AC Surge Protector, Iimp=12.5 kA
- DS250VG : Type 1 AC Surge Protector, Iimp=25 kA.
- DUT250VG : Type 1 AC Surge Protector, three phase, Iimp=25 kA
- DS60VGPV : Type 1 DC Surge Protector for PV application,Iimp=12.5 kA
- DS50VGPV:Type 2 DC Surge Protector for PV application, Imax=40 kA

Advantages of VG Technology

versus other technologies (specifically the triggered spark gap)

1. Gas-filled-Spark Gap (GSG)

CITEL VG surge protectors are using specific gas discharge tubes: GSG. These essential components are the result of over 75 years of experience in the gas discharge tube field, are meant for power network and ensure a perfect electrical stability.

VG TECHNOLOGY → ***Increase reliability***

2. Very low clamping level and high surge current capability

GSG are able to conduct very high surge currents (Iimp, Imax) with a very low residual voltage (Up). Such characteristics could only previously be reached with the combination of a Type 1 and a Type 2 surge protector.

VG TECHNOLOGY → ***Equivalent to Type « 1+2+3 » or « 2+3 » solutions***
→ ***Maximum efficiency***
→ ***Compact design***

3. Increased TOV withstand

VG surge protectors can handle very high TOV levels (Temporary over Voltage) up to 450Vac without any degradation to the level of protection.

VG TECHNOLOGY → ***Increased reliability for areas with unstable power networks***

4. No follow current

Unlike to "Air Gap" technologies, "VG" Technology does not create any follow on current.
VG ->Increased service continuity (No tripping of the upstream overcurrent protection device (OCP) during surge events)

→ ***Improvement of the network quality (no power line disturbances)***
→ ***Easy selection***

5. Robustness and reliability

All the components of the VG surge protector are designed to handle high impulse discharge currents without any assistance from auxiliary systems. On the contrary, the "Triggered Air Gap" technology includes a control circuit, using very low power components, which handle parts of the surge current. During some low amplitude, low voltage transients this weak circuit will handle the full amount of current and will eventually fail.

→ ***Increase reliability***
→ ***Better life expectancy***

6. Safe disconnection and Device status signalization

VG surge protectors use a safe disconnection system and provide real-time status indication of internal components. For a "Triggered Air Gap" technology, the disconnection and signalization only can provide the status of the control circuit and not the main protection circuit.

→ ***Safe and efficient maintenance***

7. No ageing

During normal operation, in addition to transient events, varistors are always conducting a small amount of current. This current is the result of working current (Ic) and leakage current (Ipe) and is due to the varistors connection to the grounding system. This type of conduction can be stressful to the varistor over time, especially in dc power systems, and cause the varistor to age prematurely.

→ ***Maximum life***

8. Easier surge protection coordination

In the case of coordinated installations, the surge protector downstream a VG surge protector does not need any special consideration, such as a sufficient distance between locations, in order to ensure a working coordination between multiple SPDs. Note: due to its optimized protection level, the VG surge protector can be used without any additional surge protector

→ ***Easier to use***

Conclusion :

CITEL Surge Protectors based on VG technology offer the best level of efficiency and reliability, conditions essential for achieving the maximum performance of your protection system.

DIN Rail AC power Surge Protectors

Surge protection installation

Location

DS surge protectors are installed as follows, according to their types :

- **Type 1 or «Heavy duty»** : at the origin of the installation, in a separate box or on the main electrical panel, for efficient discharge of partial lightning currents.
- **Type 2 or «Primary»** : at the origin of the installation, on the main electrical panel, in order to eliminate impulses currents as fast as possible and thereby avoid coupling.
- **Type 2 (or Type 3) or «Secondary» :** on the secondary panel, near the sensitive equipment, to limit ringing and improve the level of protection.

Wiring

Since lightning surges are essentially common-mode phenomena, DS surge protectors are connected mainly in common mode (between the active conductors and ground).

Some recommendations call for additional differential-mode protection (between phase and neutral). For these applications, CITEL offers specific versions, using a gas tube base module for the Neutral to Ground (common mode) protection: this type of installation is called a «CT2 connection» in IEC 60364 standard, is used in surge protectors such as DS44-230/G.

Common mode protection – CT1 Connection

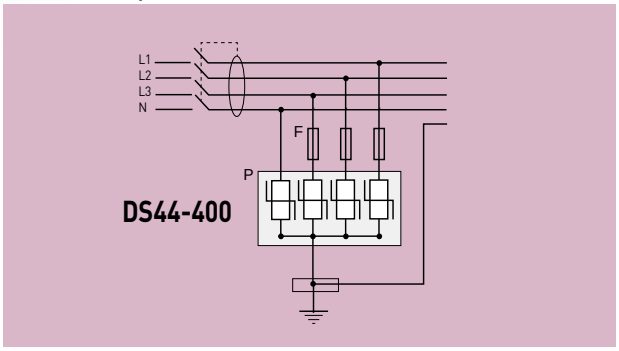

Common and differential mode protection - CT2 Connection

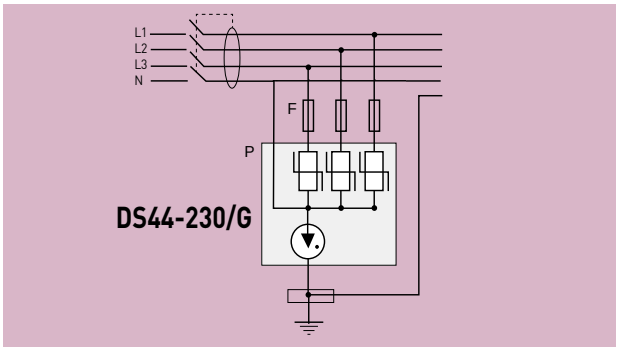

Associated fuses

To comply with standards and safety, the AC surge protectors must be protected against a possible end of life in short-circuit: the user must install on each SPD branch, a protection against short-circuit current (fuses or breaker).

The rating of this fuses is given by the SPD manufacturer in the product datasheet or installation instructions. The choice of this rating depends of 2 criteria:

- Withstand of the short-circuit current tes in the IEC 61643-1 standard: the fuse must cut safety the short-circuit current before an harsh destruction of the SPD.
- Withstand of the discharge currents (In or Iimp): the fuse must be able to conduct the discharge current of the SPD without blowing.

CITEL has selected some fuses and DIN rail holders to fit with his SPD range. The fuses equipped with failure indicators to check easily their opening and the holders can be supplied with or without contact for remote signal of fuse status (see page 62).

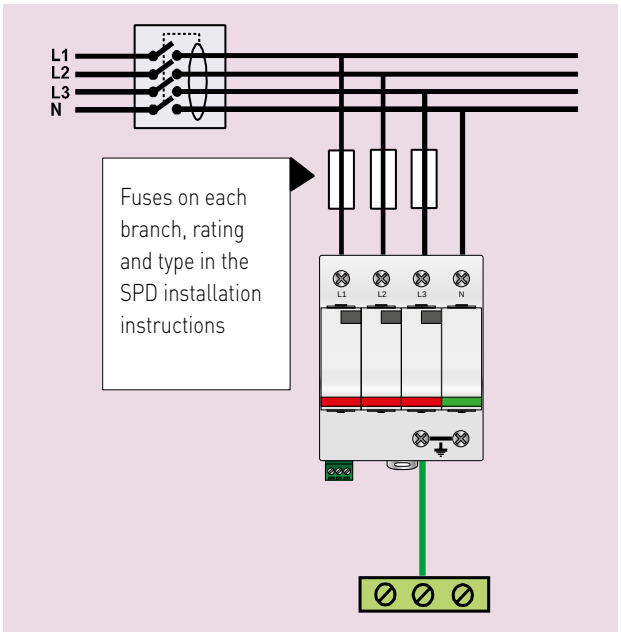

Installation

DS surge protectors are connected in parallel on the AC network and must be equipped with external fuses (or breakers) for short-circuit protection (see paragraph «Associated fuses»).

- The total length of connection wires to AC network must be lower than 0.5 m in order not to increase the protection level (Up) provided by the SPD.
- Wiring is made by screw connections. On some models, a distribution bus can be used.
- The protection wire coming from the SPD must be connected to the bonding bar of the electrical panel. Paralleling the protection wire with phases conductors must be avoided.
- The cross sectional wire must be 6 mm² minimum for Type 2 SPD's and 16 mm² for Type 1.
- Local earthing resistance must be in compliance with the electrical rules.

Further information can be found in IEC 61643-12 standard (selection and application principles for low voltage SPD).

Installation example (Type 2 surge protector DS44S-230/G)

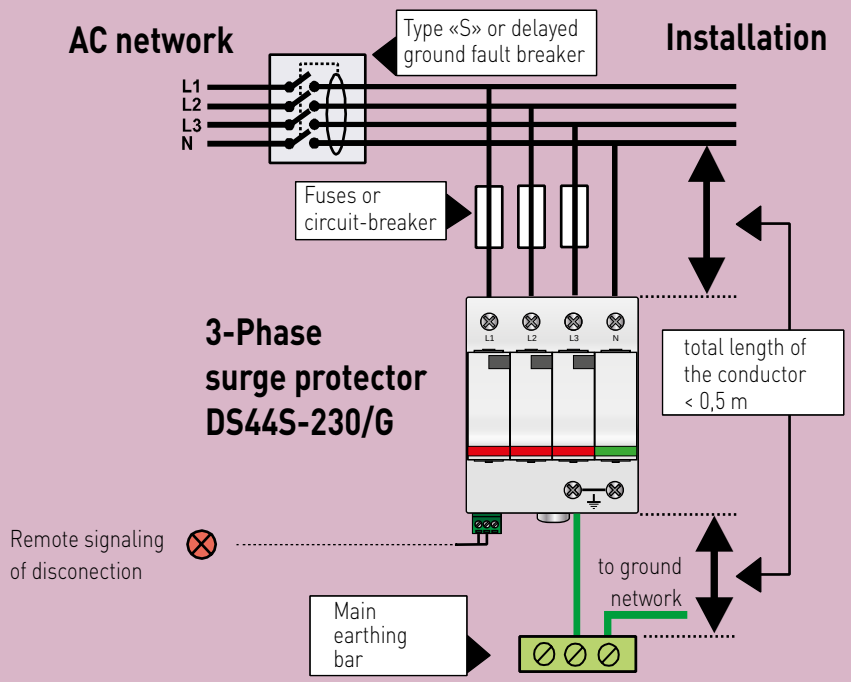

DIN Rail Low Voltage Surge Protectors

Choosing Surge Protectors

CITEL's line of AC power surge protectors is designed to cover all possible configurations in low voltage installations.
They are available in many versions, which differ in :
- Type or test class (1 , 2 or 3)
- Operating voltage (Uc)
- AC network configuration (Single/3-Phase)
- Discharge currents (Iimp, Imax, In)
- Protection level (Up)
- Protection technology (varistors, VG tecnology, filter)
- Features (differential mode, plug-in, remote signaling, compact..).

The surge protection selection must be done following the local electrical code requirements (e.g. : minimum rating for In) and specific conditions (e.g. : high lightning density).

Choosing the Type of surge protectors

The type of surge protector is based on its location and the constraints of the installation to be protected.

Configuration	SPD	Location	CITEL
Installation equipped with LPS or could be hit by lightning	**Type 1+2** **Type 1+2+3**	Origin of the installation origin (Panel or main switchboard)	DS130R DS130VG DS250VG DUT250VG DS250E DS500E
Installation without LPS	**Type 2** **Type 2+3**	main switchboard	DS70R, DS40 DS240,DS440
Secondary protection (downstream primary SPD)	**Type 2** (or Type 3)	close to protected equipment	DS10 DS215 DS415, DS98

Choosing the operating voltages Uc and UT

The SPD Uc voltage (maximum continuous operating voltage) depends on:
- Nominal voltage of the AC network (Uo)
- Type of AC system (TN, TT, IT).

The level of resistance to temporary overvoltages (UT) is related to the Uc voltage. In addition, withstanding the "high voltage" TOV (1200 Vac, 300A, 200 ms) between Neutral and PE is needed in TT AC system, which requires the CT2 diagram.

Operating voltage Uc (Line/Ground)

AC Network	**230/400V**			**120/208V**
AC system	TT	TN	IT	TN
Voltage Uc mini	**255 V**	**255 V**	**440 V**	**135 V**
Voltage U_T	**335/440 V**	**335/440 V**	**-**	**230/175 V**
TOV N/PE	**1200 V**			
Example of CITEL product	DS42-230/G	DS42-230	DS43-400	DS42-120

AC network configuration

DS surge protectors are available for single, 3-Phase and 3-Phase + neutral AC networks.

Choosing Iimp

The impulse current Iimp is defined for Type 1 SPD. The minimum rating for Iimp is 12.5 kA by pole, following IEC 60364-5-534 . This level is adapted to the real phenomenon. This value can, however, be increased according to the risk (calculation according to EN 62305-1)
CITEL proposes, in its Type 1 SPD range, 3 levels of Iimp current by pole: 12.5, 25 and 50 kA.

Configuration	Iimp/pole	CITEL
Maximum risk	**50 kA**	DS500E
Very high lightning density Bad earthing	**25 kA**	DS250VG DS250E DUT250VG
High, meduim or low lightning density	**12.5 kA**	DS130VG DS130R

Choosing In current

The relevant nominal discharge current In for the SPD is in relation with the lightning risk in the installation area.
The minimum rating of In for a SPD connected at the installation entrance is 5 kA (8/20 µs waveform), required by standard.
Nevertheless higher ratings are advised in case of high lightning density.
Moreover higher values of In current will increase the SPD lifetime.
Imax (max. discharge current) rating is linked to In.

Conditions	In	CITEL
Very high lightning density	**> 20 kA**	DS70R
High or medium lightning density	**10-20 kA**	DS40, DS40VG DS240, DS440
Low lightning density or secondary SPD	**5 kA**	DS10,DS215 DS415, DS98

Choosing the protection level Up

The user must select a surge protector with a protection level Up adapted to the withstand level of terminal equipment. In every case, the lower the protection level Up, the better the protection.
IEC 60364 standard calls for the minimum protection level of 2.5 kV for a SPD connected at the entrance of a 230/400 V network : this level is in compliance with the withstand of robust devices (electromechanical type).
Electronic-based terminals have lower impulse withstand and require a better protection : so, surge protectors with 1.5 kV protection are necessary to provide efficient protection.

Conditions	Recommended Up	
	230/400 V AC network	120/208 V AC network
SPD at the installation entrance	**2.5 kV max.**	**1.5 kV max.**
Electromechanical protected equipment	**2.5 kV**	**1.5 kV**
Electronic-based protected equipment	**1.5 kV**	**0.8 kV**

Choosing the SPD technology

A relevant choice of the SPD technology, as well as the use of coordination diagram can help to improve the protection level.

DS surge protectors are based on Varistor (MOV) technology.
Some versions use different electrical diagrams in order to improve some of their characteristics :

- «VG» technology :
this Gas tube-Varistor hybrib association, used in SPD: DS130VG, DS250VG, DUT250VG, DS40VG, improves the reliabity and the efficiency (see page 13-14)..

- Association with RFI filter :
The Surge protection panel M series and secondary SPD DS40HF and DS-HF combine surge protection stage and/or filter stage in order to improve the protection level.

Coordination of Surge Protectors

In order to provide maximum protection efficiency, it is necessary to create a «coordination» diagram, that means installation of a «primary» SPD at the network entrance and a «secondary» close to sensitive equipment.

This association is required in the 2 following cases :

- High sensitivity equipment :
➪ Improvement of protection level.

- Long distance (greater than 30 m) of wire between equipment to be protected and primary SPD :
➪ Reduction of ringing voltages created during the surge transmission.

Efficient SPD coordination is performed by including between primary and secondary SPDs :
- a minimum length of wire (> 10 m).
or
- a coordination inductor (DSH range).

Coordination with VG Surge Protector

With VG technology there is no consideration of the cable lenght or to use inductance (see page 19).

Coordination by conductor

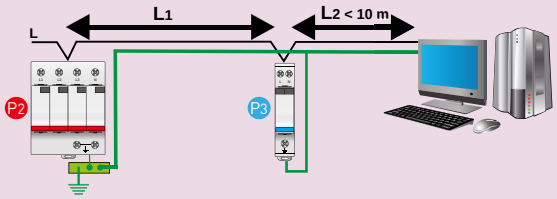

Coordination by inductor

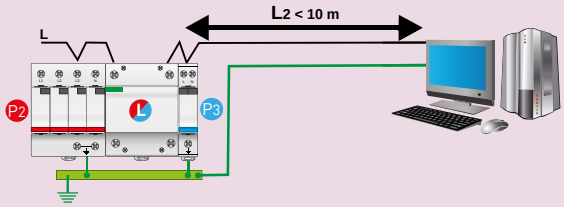

P2 : Primary surge protector (ex. DS40)
P3 : Seconadary surge protector (ex. DS215/G)
L : Coordination inductors (ex. DSH35)
L1 : Length of conductor between surge protector
L2 : Length of conductor between surge protector and installation

DS surge protectors wiring

Coordination of Surge Protector

In order to provide maximum protection efficiency, it is necessary to create a «coordination» diagram: that means installation of a «primary» SPD at the network entrance and a «secondary» close to sensitive equipment.
Efficient SPD coordination is performed by including, between primary and secondary SPDs :
- a minimum length of wire (> 10 m).
or
- coordination inductors (DSH range: see below).
Futher information is available in installation instruction sheet.

Example of coordination on 3-Phase network.

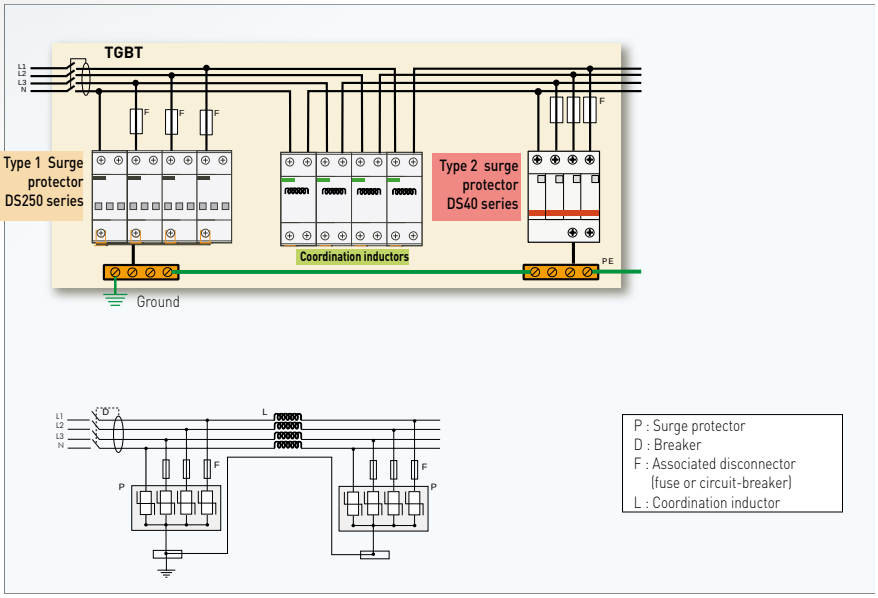

Direct coordination with VG surge protector

An additional benefit of the VG technology is to ensure effective coordination with secondary surge arrester without special precautions (no decoupling length required). It is therefore possible to directly connect the output of the surge arrester head VG secondary.

Note: However, because of the very high lightning discharge capacity and low residual clamping of the VG SPD, the addition of a secondary surge protector is not necessary.

Example of coordination on 3-Phase network.

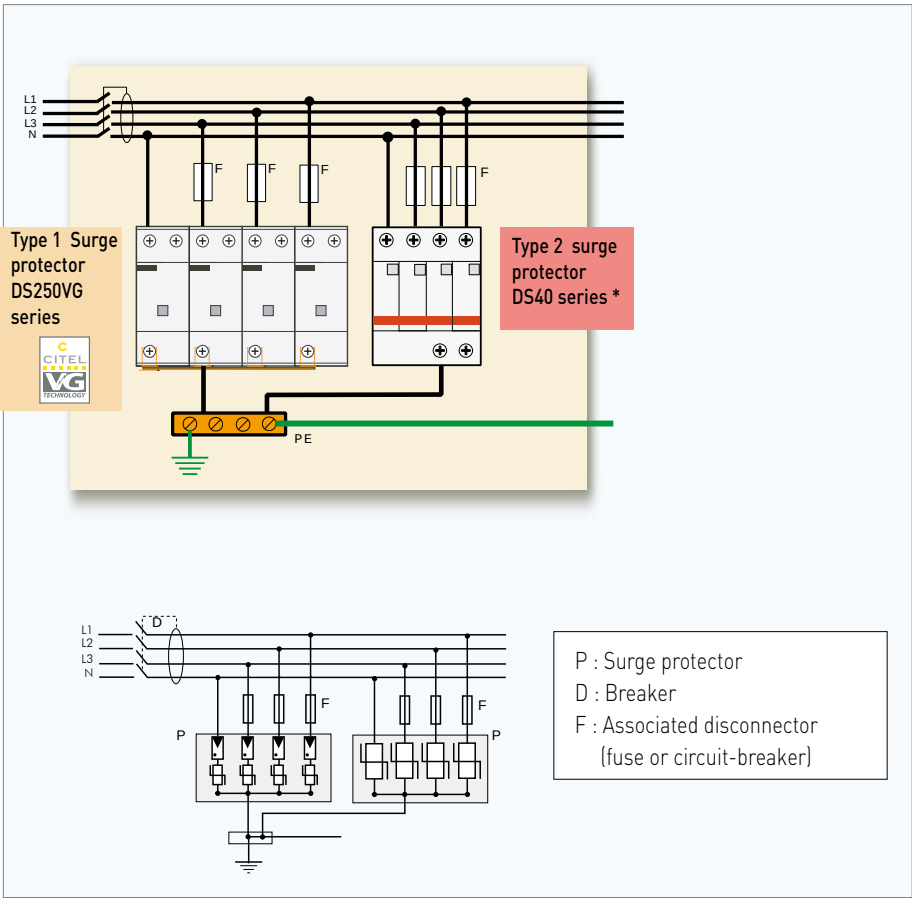

*optional

Common mode protection (CT1connection)

Common mode (L/PE or N/PE) protection provided by DS surge protectors in relation with the different types of AC network. Called CT1 connection type in IEC 60364 std.

1 Type 1 Surge Protector Single-phase network

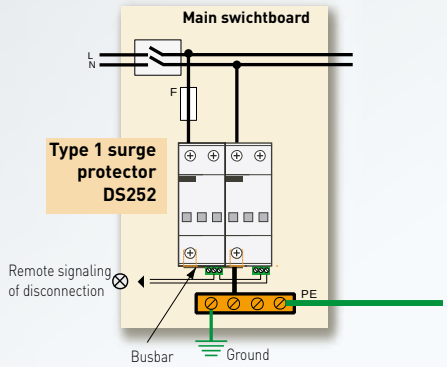

4 Type 2 Surge Protector Single-phase network

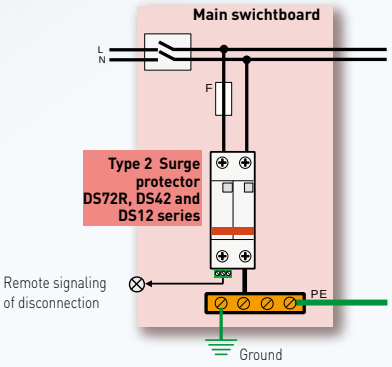

Diagram

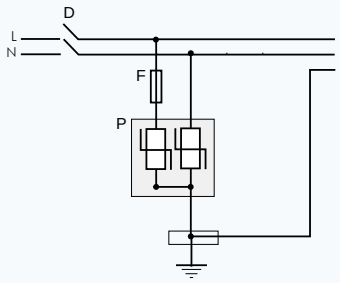

2 Type 1 Surge Protector 3-Phase network

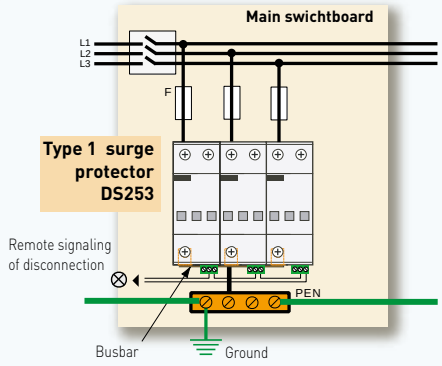

5 Type 2 Surge Protector 3-Phase network

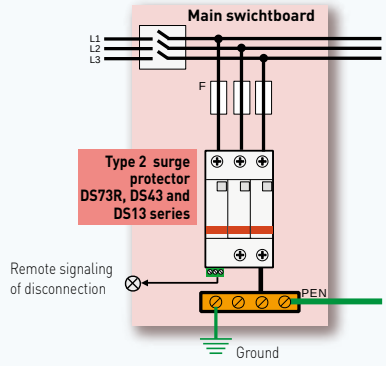

Diagram

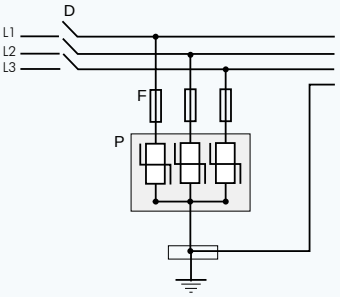

3 Type 1 Surge Protector 3-Phase network + neutral

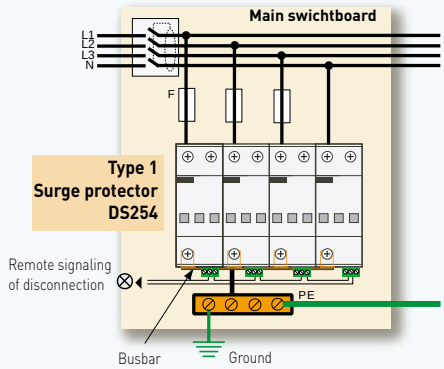

6 Type 2 Surge Protector 3-Phase network + neutral

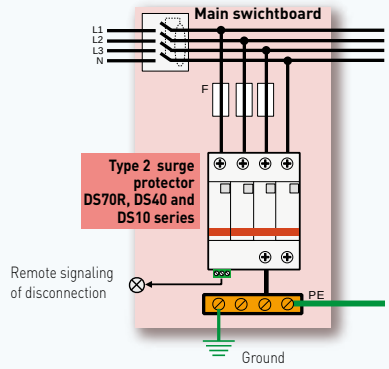

Diagram

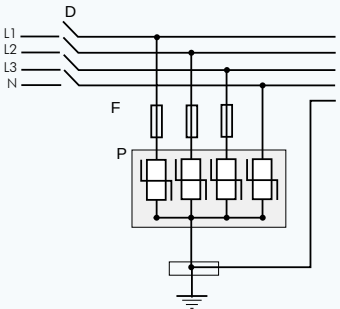

P : Surge protector
D : Circuit breaker
F : Associated disconnector
(fuse or circuit-breaker)

DS surge protectors wiring

Common and Differential mode protection (CT2 connection)

Common mode (L/PE) and differential mode (L/N) protection provided by DS surge protectors in relation to the different types of AC network. These configurations CT2 (following IEC 60364) are also called "1+1" and "3+1" mounting.

7 Type 1 Surge Protector Single-phase network

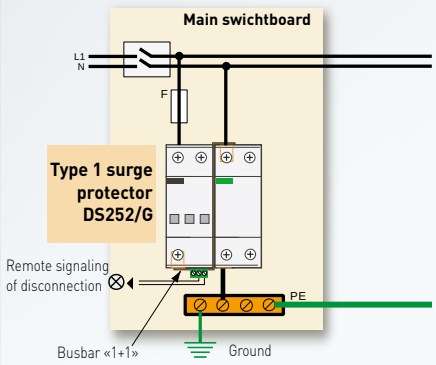

9 Type 2 Surge Protector Single-phase network

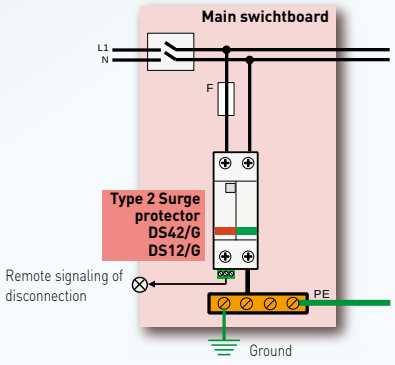

Diagram

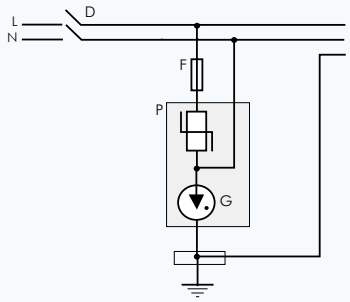

8 Type 1 Surge Protector 3-Phase network + neutral

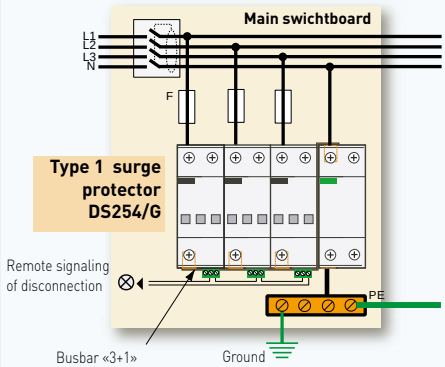

10 Type 2 Surge Protector 3-Phase network + neutral

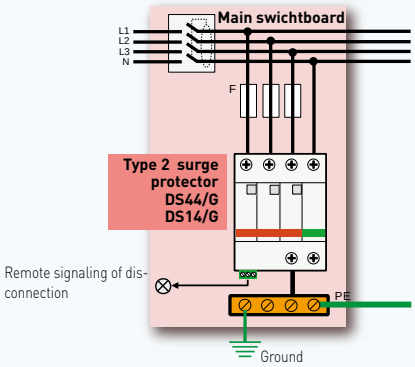

Diagram

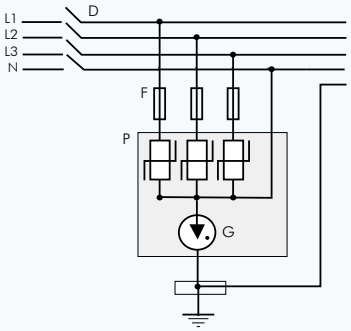

11 Type 1 Surge Protector 3-Phase network + neutral

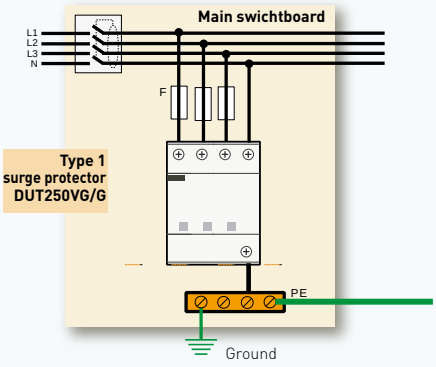

Diagram

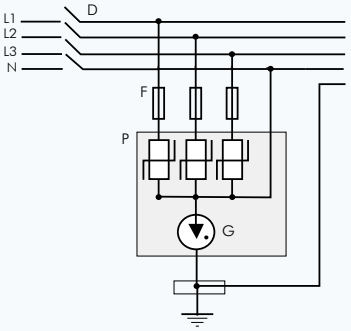

P : Surge Protector
G : Surge protector with GDT
D : Circuit breaker
F : Associated disconnector (fuse or circuit-breaker)

Multipole Type 2 surge protectors wiring

Wiring instructions for Multipole Type 2 surge protectors.

12 Type 2 Surge protector Single-phase network — Diagram

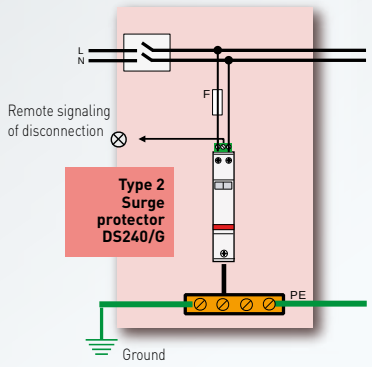

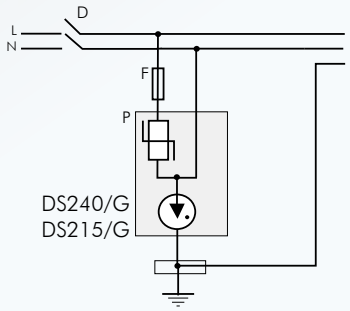

13 Type 2 Surge protector 3-Phase network + neutral — Diagram

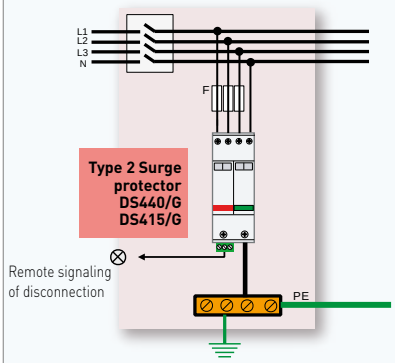

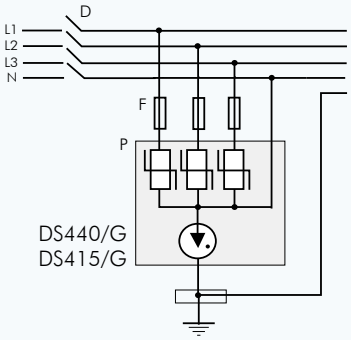

14 Type 2 surge protector + Filter Single phase network — Diagram

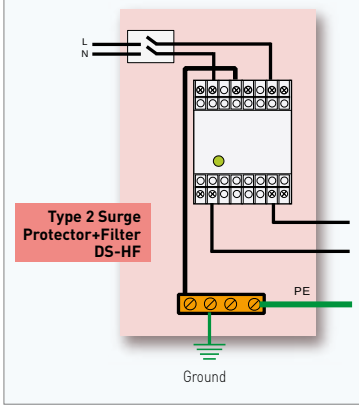

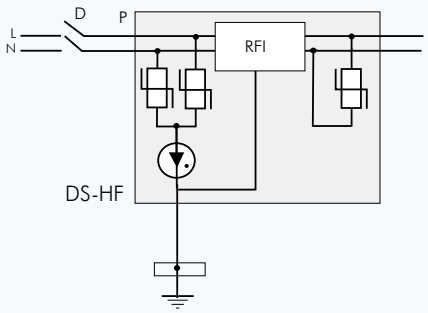

P : Surge protector
RFI : RFI filter
D : Breaker
F : Associated disconnector
(fuse or circuit-breaker)

International Standards for AC surge protectors

The performance, selection and application of AC surge protectors are defined by standards, to ensure an efficient and secure use.
National standards are often based on IEC international standards. In the field of AC surge protection, several documents must be taken into consideration.

Standards in surge protection

Related standards for test performance, selection and application of low voltage SPDs are :

General rules : IEC 60364 standard :
- Section 4-443 : «Protection against overvoltages of atmospheric origin or due to switching» :
This section of IEC 60364 is intended to describe the means by which transient overvoltages can be limited to reduce the risk of failures in the installation, and in electrical equipment connected to it, to an acceptable level.

- Section 5-534 : «Devices for protection against overvoltages» :
This section gives the basic requirements for the selection and implementation of the SPDs for electrical installation of buildings to obtain a limitation of transient overvoltages.

Product standard : IEC 61643-11 :
This document addresses performance tests for AC surge protective devices (SPDs) following different classes (Class I , II or III test). It is mainly dedicated to surge protector manufacturers

Selection and application guide : IEC 61643-12 :
This guide addresses the selection and application principles of SPDs in practical situations.

The section 4-443 of IEC 60364 recommends SPDs on electrical installations if they are supplied by overhead lines (partially or totally) and if the local keraunic level is equal or greater than 25. Some national standards based on IEC make the SPD installation mandatory in these conditions.

Recommendations for SPD installation

Section 5-534 gives the minimum performance required for SPD installed at the entrance of installation, as nominal discharge current In ⩾ 5 kA for Type 2 SPD and Lightning current limp ⩾ 12.5 kA for Type 1 SPD.

1 - The installation equipped with lightning rod (LPS):
➪ Recommendation : Type 1 SPD, with Lightning impulse current limp of 12,5 kA minimum, connected at the origin of the installation.

2 - The installation is connected to an overhead AC network and the lightning density Ng ⩾ 2.5 (or local keraunic level Nk ⩾ 25) :
➪ Recommendation : Type 2 SPD, with nominal discharge current In ⩾ 5 kA, connected at the origin of the installation.

3 - The installation is connected to an overhead AC network and the local keraunic level Nk ⩽ 25 (or the lightning density Ng ⩽ 2.5) :
➪ Surge Protector not required.

4 - The installation is connected to an underground AC network
➪ Surge Protector not required.

Nevertheless, in the two last cases, a more accurate analysis could be done, taking into account the type of equipment (sensitivity, cost..) or the consequences of a service interruption (downtime costs, human hazards...) : IEC 61662 international standard proposes a method for assessing the risk related to surges due to lightning.

5 - The unavailability of the electrical network could have consequences on human safety.
➪ Surge Protector mandatory or risk analysis required.

Application of the AC surge protectors following IEC 60364

Type of installation	Ng < 2.5	Ng > 2.5
Installation equipped with direct lightning protection system (LPS)	**Mandatory** (Type 1)	**Mandatory** (Type 1)
Connection to overhead AC line	No mandatory*	**Mandatory** (Type 2)
Connection to underground AC line	Non mandatory*	Non mandatory*
The unavailabalitiy of the electrical network could have consequences on human safety	Risk analysis required	**Mandatory**

(*) Surge protectors are recommended in case of sensitive equipment or when a reinforced reliability is required.

Conclusion

Depending on the countries, AC surge protectors could be recommended or mandatory in relation with the external conditions (type of network and lightning threat). Risk assessment methods are also available to determine more accurately the need of surge protection. In any case, all the present electrical installations are crowded with sensitive devices, installing properly selected surge protectors is becoming more and more critical.

North-American regulation on low voltage Surge Protection Devices

Standard Status

In North America, the international standard IEC does not apply. Other national standards and guidelines exist, such as UL, NEC and ANSI/IEEE, which are used to determine your risk to transients in low voltage power networks as well as the use of appropriate protector for each application.

NEC (National Electrical Code):

The article 285 of NEC defines the use of standalone surge protectors and imposes their compliance with the product standard UL1449 Ed. 3. The article 285 defines the selection and installation conditions of SPDs.

Product Standard: UL1449, 4th Ed.:

This document, devoted to surge protection manufacturers, defines the parameters as well as the test procedure to qualify an SPD: it is important to note that the UL Type designations of surge protective devices, while similar, is not exactly the same as SPD types in IEC61643-11.

SPD type according to UL 1449 4th Ed.:

Type 1 - Permanently connected surge protection devices to be installed both, on the supply side and the load side of the equipment main overcurrent protective device. The surge protection devices are supposed to be self-protected against short circuits and do not require external protection.

Type 2 - Permanently connected surge protection devices to be installed on the load side of the equipment main overcurrent protective device. This surge protection device requires an external short circuit protection device.

Type 3 - Surge protection devices installed at a conductor length of 10 meters or greater from the electrical panel. For example, the mobile surge protectors (that can be plugged into the outlet such as a multiple power outlet etc.). They can also be directly installed on the equipment to be protected.

Type 4 « Component Assemblies » - Component Assemblies consisting of one or more Type 5 components and a disconnect complying with the limited end-of-life short circuit current tests (0.5A, 2.5A, 5A and 10A).

Type 1, 2, 3 « Component Assemblies » - Type 4 Component Assemblies having, in addition to the limited end-of-life short circuit current tests, passed all the other end-of-life tests (under the short circuit current of 100A, 500A, 1000A and SCCR) and also with (2CA) or without (1CA) external short circuit protection

Type 5 - Discrete component surge suppressors, such as MOVs, Diode or GDT that may be mounted on a PWB, connected by its leads or provided within an enclosure with mounting means and wiring terminations.

ANSI/IEEE Guide:

ANSI/IEEE publishes different informative guides regarding the risk of transient overvoltages to low voltage networks (IEEE C62.41.1), the surge environment and types of transients (IEEE C62.41.2) as well as the method for testing equipment against transients that are connected to the low voltage network (IEEE C62.45).

Another important guideline detailing the installation of SPDs is called IEEE C62.72

IEEE C62.41.2 Guide:

IEEE C62.41.2 Guide offers a selection of performance surge arresters according to their location in the system.

Categories depending on the location guide IEEE C62.41.2

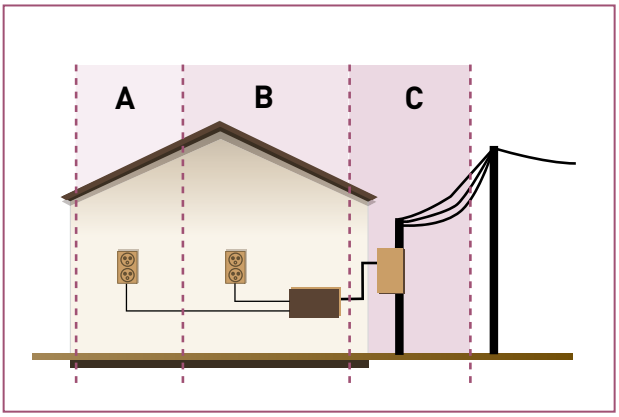

Selection of surge protector following the guide IEEE C62.41.2

Catégories of location		Held mininale recommended arresters	
		Voltage 1,2/50 µs	Current 8/20 µs
A	Indoor installation	**6 kV**	**0,5 kA**
B	Entry installation	**6 kV**	**3 kA**
C	Outdoor installation low exposure	**6 kV**	**6 kA**
C	Outdoor installation high exposure	**10 kV**	**10 kA**

DS range from CITEL

Application field

Application in standard electrical cabinets in compliance with international standard.

DIN Rail mounting

Slide the surge protector into the rail, and press until the unit fits and snaps.

Application field

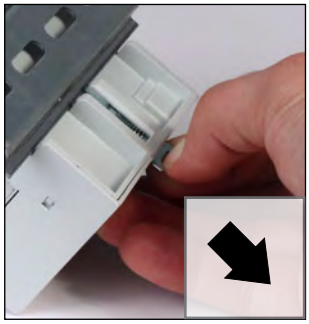

Pull the assembly clamp, and remove the device.

A pluggable design

The design of most DS surge protectors is based on the use of a module to be plugged into a matching base. This makes replacement and checking very easy without impairing your protection.
For multipole surge protectors, the possibility of replacing a single pole makes repairing a surge protector less expensive.

The plug-in module is identified with a color label in relation with the type (black = Type 1 ; red = Type 2 ; blue = low power Type 2 or Type 3) and are keyed for operating voltage, in order to avoid misapplications

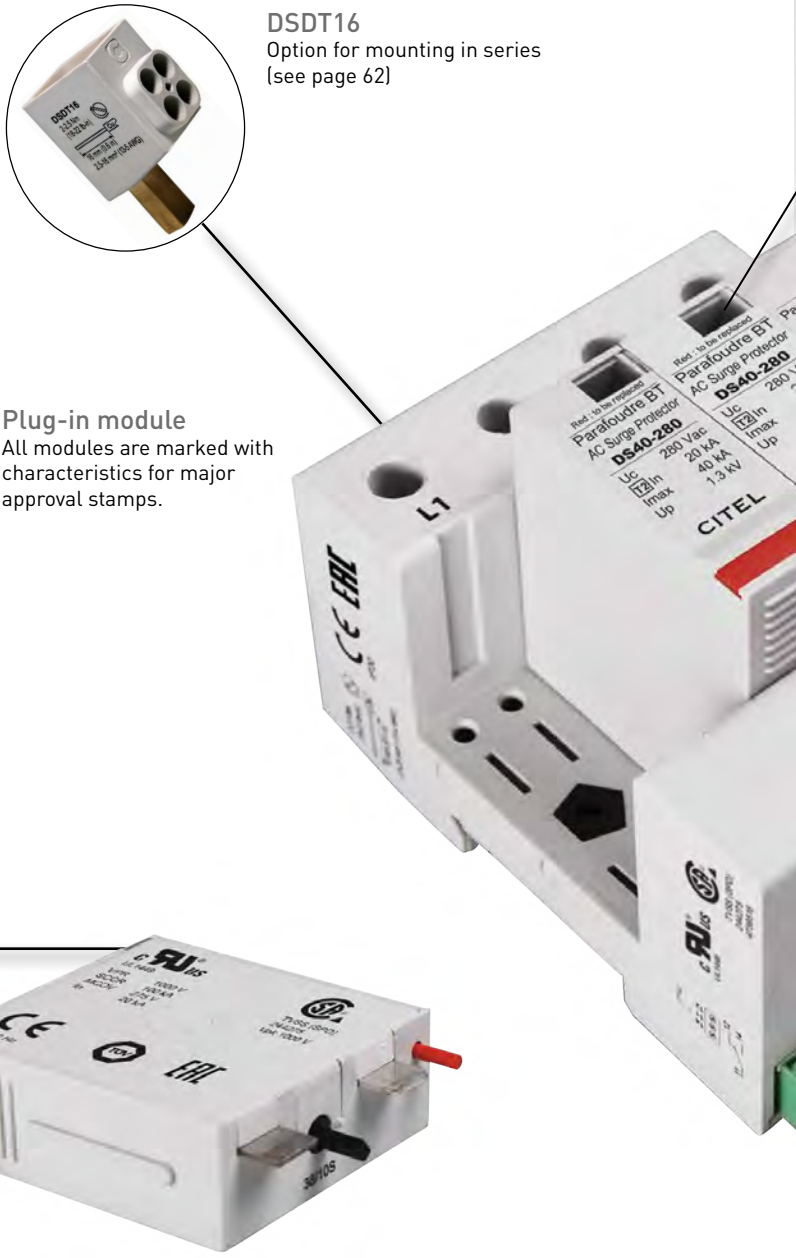

Signaling

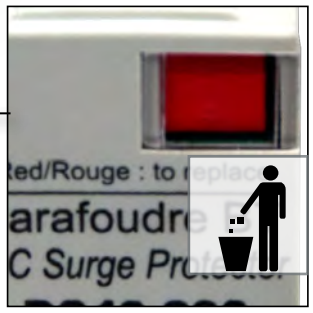

Defective modules are identified by red indicator in the front window. It is then necessary to replace them

Identified connections

All connections are identified to avoid an error (free installation).

Spare module

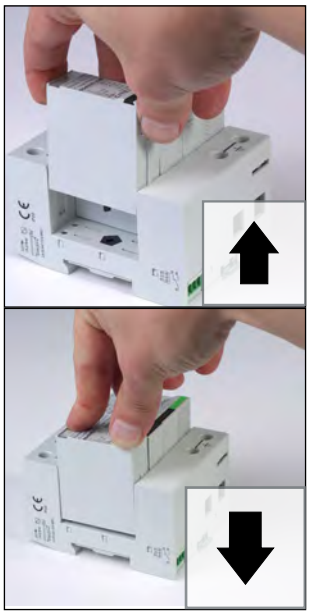

Easy module replacement, requiring no tools, thanks to the pluggable modules.

Module codification

Mistake-free replacement thanks to an explicit and mechanical codification for the different operating voltages.

Remote signaling

Less wiring thanks to a single remote signaling connector for all poles

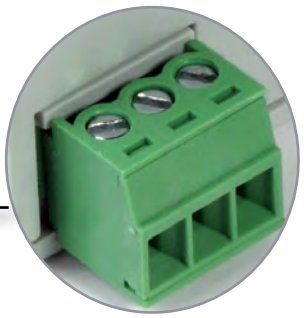

Type 1 + 2 and Type 1+ 2 + 3 Surge Protectors

Type 1+2 and Type 1+2+3 surge protectors are heavy duty devices, designed to be installed at the origin of the AC installations equipped with LPS (Lightning Protection System). They are necessary to protect sensitive equipment connected to AC network against direct and indirect effects of lightning. Following the different national electrical codes, these SPDs can be recommended or mandatory.

These surge protectors are available in a wide range of versions to be adaptable to all configurations :

- Iimp by pole : 12.5, 25 and 50 kA
- Total Iimp : up to 100 kA
- Single, 3 or 3-Phase+Neutral AC network
- 230/400 V, 120/208 V and 690 V AC network
- All AC system types
- Common mode protection (CT1 configuration) or Common and Differential mode protection (CT2 configuration)

Several mechanical formats are available to meet the needs of the user: Enclosures unipolar assembled, monobloc or equipped with pluggable modules.

These multipolar SPDs are using 2 different technologies :

- DS250VG, DS130VG, DUT250VG : «VG» technology,
- DS500E, DS250E, DS130R : «MultiMOV» technology.

Part number information

DS254 VG-xxx/G

- " " = CT1 configuration (common mode)
  "G" = CT2 configuration (common and diff.)
- Operating voltage
- "VG" = «GSG/MOV» technology
  "E" or "R"= «MOV» technology
- Number of protected poles
- Iimp by pole : «13» =12.5 kA ; «25» = 25 kA, «50» = 50 kA
- "DS" = assembled or pluggable surge protector
  "DUT" = monobloc 3-phase unit

Range		*Description*	*Iimp by pole* (10/350 µs)	*Characteristics*	*Page*
DS250VG		1-pole reinforced surge protector - VG Technology	***25 kA***	Very high energy Very high efficiency	29
DS250E		1-pole reinforced surge protector - VG Technology	***25 kA***	Very high energy	31
DS500E		1-pole reinforced surge protector	***50 kA***	Very high energy	33
DUT250VG		3-phase surge protector VG Technology	***25 kA***	Compact Very high energy Very high efficiency	36
DS130VG		Pluggable surge protector VG Technology	***12,5 kA***	Compact Pluggable Very high efficiency	37
DS130R		Pluggable surge protector	***12,5 kA***	Compact Pluggable	39

Type 1 + 2 + 3 AC Surge Protector
DS250VG series

CITEL

Iimp 25 kA

DS250VG-300

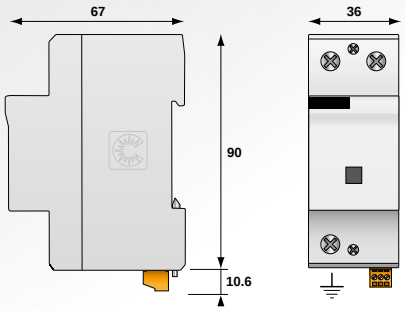

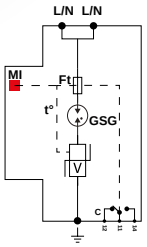

V: High energy varistor network
GSG: Specific gas Tube
Ft: Thermal fuse
C: Remote signaling contact
t°: Thermal disconnection system
MI: Disconnection indicator

- **Type 1 + 2 + 3 Surge protector**
- **25 kA on 10/350 µs impulse**
- **Low voltage Up**
- **Internal disconnection, status indicator and remote signaling**
- **Optimized to TOV**
- **IEC 61643-11 and EN 61643-11 compliance**
- **UL 1449 ed. 4 recognition**

DS25x VG-xxx/G

« » = CT1 configuration (common mode)
«G» = CT2 configuration (common and diferential mode)
Operating voltage
«VG» = VG Technology
Number of protected poles (2,3,4)

Characteristics

CITEL Model		DS250VG-400	DS250VG-300	DS250VG-120
Description		Type 1+2+3 AC surge protector one-pole		
Network		230/400 V	230/400 V	120/208V
Max. AC operating voltage	Uc	440 Vac	255 Vac	150 Vac
Temporary Over Voltage (TOV) Charasteristics - 5 sec.	UT	580 Vac withstand	335 Vac withstand	180 Vac withstand
Temporary Over Voltage (TOV) Charasteristics - 120 mn	UT	770 Vac withstand	440 Vac withstand	230 Vac withstand
Residual current *- Leakage current at Uc*	Ipe	None	None	None
Max. Load current *(if connection serie)*	IL	100 A	100 A	100 A
Follow current	If	None	None	None
Nominal discharge current *- 15 x 8/20 µs impulses*	In	30 kA	30 kA	30 kA
Max. discharge current *-max. withstand @ 8/20 µs by pole*	Imax	70 kA	70 kA	70 kA
Impulse current by pole *- max. withstand 10/350µs*	Iimp	25 kA	25 kA	25 kA
Specific energy by pole	W/R	156 kJ/ohm	156 kJ/ohm	156 kJ/ohm
Withstand on Combination waveform *- Class III test*	Uoc	20 kV	20 kV	20 kV
Protection level @ In	Up-in	1.1 kV	1.1 kV	0.7 kV
Protection level	Up	1.5 kV	1.5 kV	1 kV
Admissible short-circuit current	Isccr	50000 A	50000 A	50000 A
Associated disconnectors				
Thermal disconnector		internal		
Fuses		Fuses type gG - 315 A		
Installation ground fault breaker		Type «S» or delayed		
Mechnical characteristics				
Dimensions		see diagram		
Connection to Network		By screw terminals : 6-35 mm² / by bus		
Disconnection indicator		1 mechanical indicator		
Remote signaling of disconnection		output on changeover contact		
Mounting		Symmetrical rail 35 mm (EN60715)		
Operating temperature		-40/+85°C		
Protection rating		IP20		
Housing material		Thermoplastic UL94-V0		
Standards compliance		IEC 61643-11 / EN 61643-11 / UL1449 ed.4		
Certification		EAC	UL / CSA / EAC	EAC
Part number		2578	2577	2787

Type 1 + 2 + 3 Multipolar Surge Protector
DS252VG, DS253VG, DS254VG

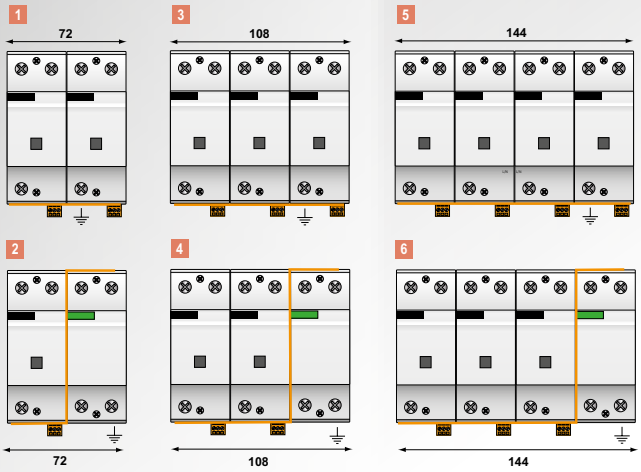

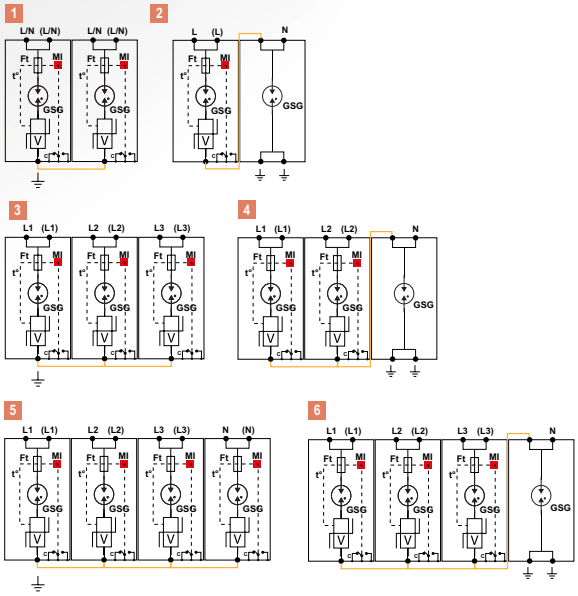

V: High energy varistor network
GSG: Specific gas Tube
Ft: Thermal fuse
C: Remote signaling contact
t°: Thermal disconnection system
MI: Disconnection indicator

DS254VG-300/G

Model	P/N	Network	AC system	Protection Mode	Itotal	Up L/PE	Up L/N	Up N/PE	Diagram
DS254VG-300/G	2756	230/400 V 3-phase+N	TT-TNS	L/N and N/PE	100 kA	-	1.5 kV	1.5 kV	6
DS254VG-120/G	2757	120/208 V 3-phase+N	TT-TNS	L/N and. N/PE	100 kA	-	1 kV	1.5 kV	
DS254VG-400	2581	230/400 V 3-phase+N	IT	L/PE and N/PE	100 kA	1.5 kV	-	1.5 kV	5
DS254VG-300	3713	230/400 V 3-phase+N	TNS	L/PE and N/PE	100 kA	1.5 kV	-	1.5 kV	
DS254VG-120	3722	120/208 V 3-phase+N	TNS	L/PE and N/PE	100 kA	1 kV	-	1 kV	
DS253VG-120/G	-	120/208 V 2-phase+N	TNS	L/N and N/PE	75 kA	-	1 kV	1.5 kV	4
DS253VG-400	2580	230/400 V 3-phase	IT	L/PE	75 kA	1.5 kV	-	-	3
DS253VG-300	3896	230/400 V 3-phase	TNC	L/PE	75 kA	1.5 kV	-	-	
DS253VG-120	3959	120/208 V 3-phase	TNC	L/PE	75 kA	1 kV	-	-	
DS252VG-300/G	3403	230 V single phase	TT-TN	L/N and N/PE	50 kA	-	1.5 kV	1.5 kV	2
DS252VG-120/G	3960	120 V single phase	TT-TN	L/N and N/PE	50 kA	-	1 kV	1.5 kV	
DS252VG-400	2579	230 V single phase	IT	L/PE and N/PE	50 kA	1.5 kV	-	1.5 kV	1
DS252VG-300	3469	230 V single phase	TN	L/PE and N/PE	50 kA	1.5 kV	-	1.5 kV	
DS252VG-120	3950	120 V single phase	TN	L/PE and N/PE	50 kA	1 kV	-	1 kV	

Type 1 + 2 Surge Protector
DS250E series

CITEL

limp 25 kA

DS250E-300

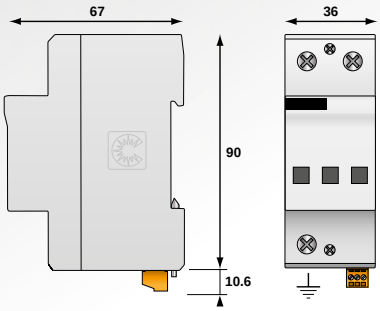

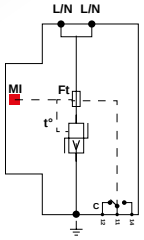

V : High energy varistor network
Ft : Thermal fuse
C : Remote signaling contact
t° : Thermal disconnection system
MI : Disconnection indicator

- **Type 1 + 2 unipolar Surge Protector**
- **limp : 25 kA on 10/350 µs impulse**
- **Imax : 140 kA on 8/20 µs impulse**
- **Internal disconnections, status indicators and remote signaling**
- **IEC 61643-11, EN 61643-11 and UL1449 ed.4 compliance**

DS25x E-xxx/G

- « » = Configuration CT1 (common mode)
- «G» = Configuration CT2 (common and differential mode)
- Operating voltage
- «E» = «Multi-Varistor» technology
- Number of protected poles (2, 3 o 4)

Characteristics

CITEL Model		DS250E-400	DS250E-300	DS250E-120
Description		Type 1+2 AC surge protector 1-pole		
Network		230/400V	230/400V	120/208V
Max. AC operating voltage	Uc	440 Vac	330 Vac	150 Vac
Temporary Over Voltage (TOV) Charasteristics - 5 sec.	UT	580 Vac withstand	335 Vac withstand	180 Vac withstand
Temporary Over Voltage (TOV) Charasteristics - 120 mn	UT	770 Vac disconnection	440 Vac disconnection	230 Vac disconnection
Residual current *- Leakage current at Uc*	Ipe	< 3 mA	< 3 mA	< 3 mA
Max. Load current *(if connection serie)*	IL	100 A	100 A	100 A
Follow current	If	None	None	None
Nominal discharge current *- 15 x 8/20 µs impulses*	In	50 kA	70 kA	70 kA
Max. discharge current *-max. withstand (à 8/20 µs by pole*	Imax	140 kA	140 kA	140 kA
Impulse current by pole *- max. withstand 10/350µs*	Iimp	25 kA	25 kA	25 kA
Specific energy by pole	W/R	156 kJ/ohm	156 kJ/ohm	156 kJ/ohm
Protection level	Up	2.5 kV	2.5 kV	1 kV
Admissible short-circuit current	Isccr	50000 A	50000 A	50000 A
Associated disconnectors				
Thermal disconnector		internal		
Fuses		Fuse type gG - 315 A		
Installation ground fault breaker		Type «S» or delayed		
Mechnical characteristics				
Dimensions		see diagram		
Connection to Network		By screw terminals : 6-35 mm² / by bus		
Disconnection indicator		3 mechanical indicators		
Remote signaling of disconnection		output on changeover contact		
Mounting		Symmetrical rail 35 mm (EN60715)		
Operating temperature		-40/+85°C		
Protection rating		IP20		
Housing material		Thermoplastic UL94-V0		
Standards compliance		IEC 61643-11 / EN 61643-11 / UL1449 ed.4		
Certification		EAC		
Part number		3731	2730	3106

CE EAC

Type 1 + 2 Multipolar Surge Protector
DS252E, DS253E, DS254E

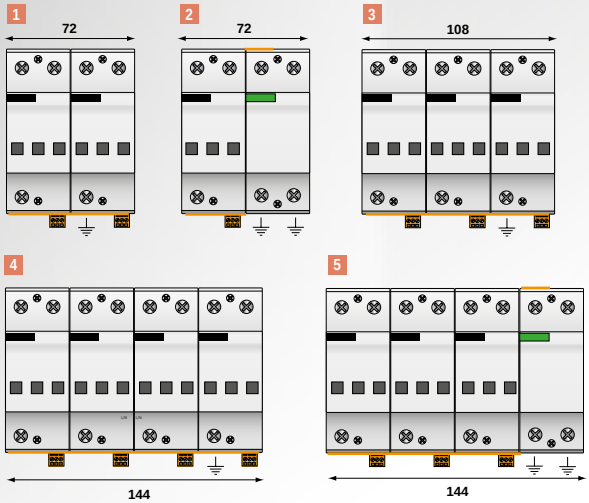

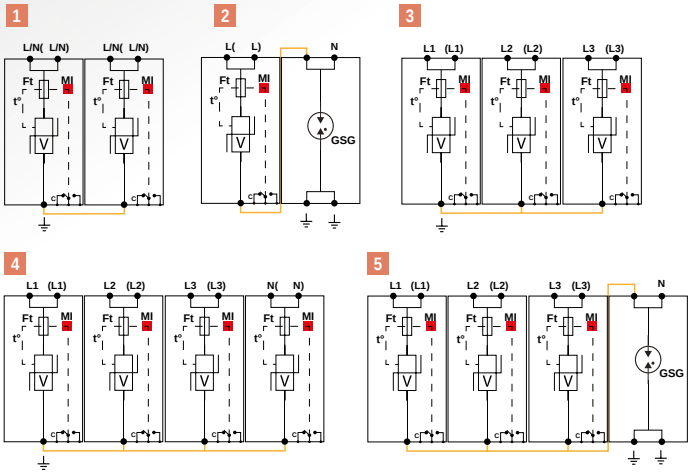

V : High energy varistor network
GSG : Specific gas Tube
Ft : Thermal fuse
C : Remote signaling contact
t° : Thermal disconnection system
MI : Disconnection indicator

DS254E-300/G

Model	P/N	Network	AC system	Protection Mode	Itotal	Up L/PE	Up L/N	Up N/PE	Diagram
DS254E-300/G	3411	230/400 V 3-phase+N	TT-TNS	L/N and N/PE	100 kA	-	2.5 kV	1.5 kV	5
DS254E-120/G	3831	120/208 V 3-phase+N	TT-TNS	L/N and N/PE	100 kA	-	1 kV	1.5 kV	
DS254E-400	3732	230/400 V 3-phase+N	IT	L/PE and N/PE	100 kA	2.5 kV	-	2.5 kV	4
DS254E-300	3371	230/400 V 3-phase+N	TNS	L/PE and N/PE	100 kA	2.5 kV	-	2.5 kV	
DS254E-120	3961	120/208 V 3-phase+N	TNS	L/PE and N/PE	100 kA	1 kV	-	1 kV	
DS253E-400	3939	230/400 V 3-phase	IT	L/PE	75 kA	2.5 kV	-	-	3
DS253E-300	3350	230/400 V 3-phase	TNC	L/PE	75 kA	2.5 kV	-	-	
DS253E-120	3887	120/208 V 3-phase	TNC	L/PE	75 kA	1 kV	-	-	
DS252E-300/G	3404	230 V 3-phase	TT-TN	L/N and N/PE	50 kA	-	2.5 kV	1.5 kV	2
DS252E-120/G	3904	120 V single phase	TT-TN	L/N and N/PE	50 kA	-	1 kV	1.5 kV	
DS252E-400	3952	230 V single phase	IT	L/PE and N/PE	50 kA	2.5 kV	-	2.5 kV	1
DS252E-300	3962	230 V single phase	TN	L/PE and N/PE	50 kA	2.5 kV	-	2.5 kV	
DS252E-120	3951	120 V single phase	TN	L/PE and N/PE	50 kA	1 kV	-	1 kV	

Type 1 + 2 AC surge protector
DS500E series

limp 50 kA

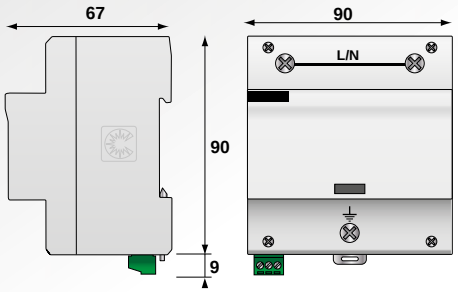

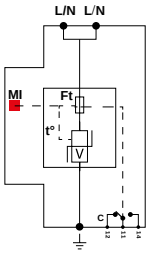

V: High energy varistor network
Ft: Thermal fuse
C: Remote signaling contact
t°: Thermal disconnection system
MI: Disconnection indicator

- **Type 1 + 2 unipolar AC surge protector**
- **limp : 50 kA (10/350 µs impulse)**
- **Imax : 200 kA (8/20 µs impulse)**
- **Internal disconnection with indicators**
- **Remote signaling**
- **EN 61643-11, CEI 61643-11 compliance**

DS50x E-xxx/G

- « » = Configuration CT1 (common mode)
- «G» = Configuration CT2 (common and differential mode)
- Operating voltage
- «E» = «Multi-Varistor» technology
- Number of protected poles (2, 3 o 4)

Characteristics

CITEL Model		DS500E-400	DS500E-320	DS500E-230	DS500E-120
Description		Type 1+2 AC surge protector unipolar			
Network		230/400 V	230/400 V	230/400 V	120/208V
Max. AC operating voltage	Uc	440 Vac	320 Vac	255 Vac	150 Vac
Temporary Over Voltage (TOV) Charasteristics - 5 sec.	UT	580 Vac withstand	580 Vac withstand	335 Vac withstand	180 Vac withstand
Temporary Over Voltage (TOV) Charasteristics - 120 mn	UT	770 Vac disconnection	770 Vac disconnection	440 Vac disconnection	230 Vac disconnection
Residual current *- Leakage current at Uc*	Ipe	< 3 mA	< 3 mA	< 3 mA	< 3 mA
Follow current	If	None	None	None	None
Nominal discharge current *- 15 x 8/20 µs impulses*	In	50 kA	50 kA	50 kA	50 kA
Max. discharge current *-max. withstand @ 8/20 µs by pole*	Imax	200 kA	200 kA	200 kA	200 kA
Impulse current by pole *- max. withstand 10/350µs*	Iimp	50 kA	50 kA	50 kA	50 kA
Specific energy by pole	W/R	625 kJ/ohm	625 kJ/ohm	625 kJ/ohm	625 kJ/ohm
Protection level	Up	2.2 kV	1.8 kV	1.8 kV	1.3 kV
Admissible short-circuit current	Isccr	50000 A	50000 A	50000 A	50000A
Associated disconnectors					
Thermal disconnector		internal			
Fuses		Fuses Type gG - 500 A			
Installation ground fault breaker		Type «S» or delayed			
Mechnical characteristics					
Dimensions		see diagram			
Connection to Network		By screw terminals : 6-35 mm²			
Disconnection indicator		1 mechanical indicator			
Remote signaling of disconnection		output on changeover contact			
Mounting		Symmetrical rail 35 mm (EN60715)			
Operating temperature		-40/+85°C			
Protection rating		IP20			
Housing material		Thermoplastic UL94-V0			
Standards compliance		IEC 61643-11 / EN 61643-11			
Certification		EAC			
Part number		3964	63166	-	-

CE EAC

Type 1 + 2 Multipolar Surge Protector
DS502E, DS503E, DS504E

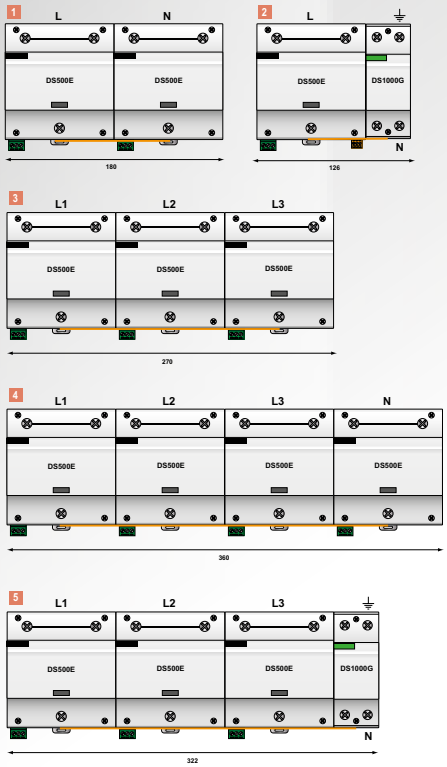

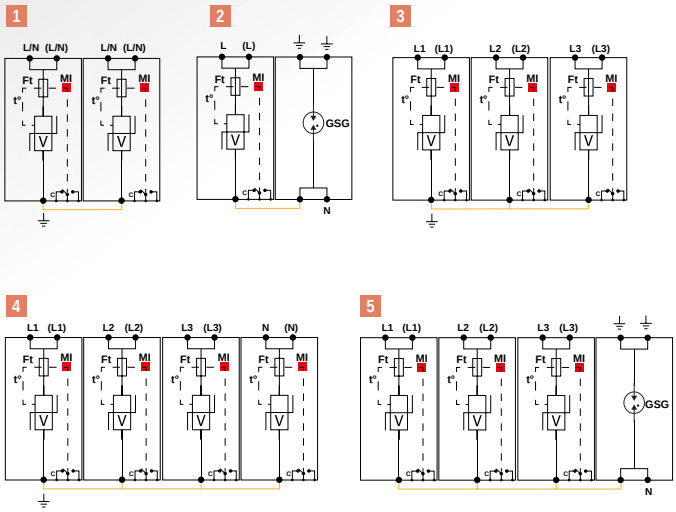

V: High energy varistor network
GSG : Specific gas Tube
Ft: Thermal fuse
C: Remote signaling contact
t°: Thermal disconnection system
MI: Disconnection indicator

DS502E-230/G

Model	P/N	Network	AC system	Protection Mode	Itotal	Up L/PE	Up L/N	Up N/PE	Diagram
DS504E-320/G	-	230/400 V 3-phase+N	TT-TNS	L/N et N/PE	100 kA	-	1.8 kV	1.5 kV	5
DS504E-230/G	-	230/400 V 3-phase+N	TT-TNS	L/N et N/PE	100 kA	-	1.8 kV	1.5 kV	
DS504E-120/G	-	120/208 V 3-phase+N	TT-TNS	L/N et N/PE	100 kA	-	1.3 kV	1.5 kV	
DS504E-400	-	230/400 V 3-phase+N	IT	L/PE and N/PE	200 kA	2.2 kV	-	2.2 kV	4
DS504E-320	-	230/400 V 3-phase+N	TNS	L/PE and N/PE	200 kA	1.8 kV	-	1.8 kV	
DS504E-230	-	230/400 V 3-phase+N	TNS	L/PE and N/PE	200 kA	1.8 kV	-	1.8 kV	
DS504E-120	-	120/208 V 3-phase+N	TNS	L/PE and N/PE	200 kA	1.3 kV	-	1.3 kV	
DS503E-400	-	230/400 V 3-phase	IT	L/PE	150 kA	2.2 kV	-	-	3
DS503E-320	-	230/400 V 3-phase	TNC	L/PE	150 kA	1.8 kV	-	-	
DS503E-230	-	230/400 V 3-phase	TNC	L/PE	150 kA	1.8 kV	-	-	
DS503E-120	-	120/208 V 3-phase	TNC	L/PE	150 kA	1.3 kV	-	-	
DS502E-320/G	-	230 V single phase	TT-TN	L/N et N/PE	100 kA	-	1.8 kV	1.5 kV	2
DS502E-230/G	-	230 V single phase	TT-TN	L/N and N/PE	100 kA	-	1.8 kV	1.5 kV	
DS502E-120/G	-	120 V single phase	TT-TN	L/N and N/PE	100 kA	-	1.3 kV	1.5 kV	
DS502E-400	-	230 V single phase	IT	L/PE and N/PE	100 kA	2.2 kV	-	2.2 kV	1
DS502E-320	-	230 V single phase	TN	L/PE et N/PE	100 kA	1.8 kV	-	1.8 kV	
DS502E-230	-	230 V single phase	TN	L/PE and N/PE	100 kA	1.8 kV	-	1.8 kV	
DS502E-120	-	120 V single phase	TN	L/PE and N/PE	100 kA	1.3 kV	-	1.3 kV	

Type 1 + 2 + 3 Surge Protector for 690 Vac network
DS250VG-690 series

limp 25 kA

DS250VG-690

DS253VG-690

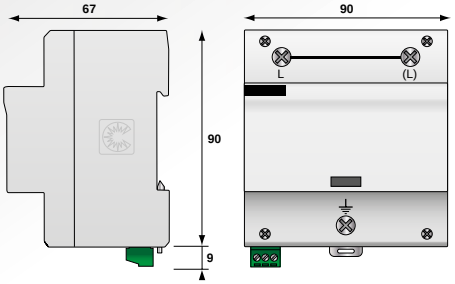

Electrical diagram for 1 pole

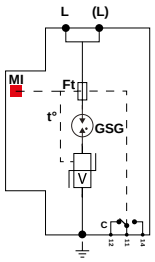

V: High energy varistor
GSG: Specific gas tube
t°: Thermal disconnection system
C: Remote signaling contact
Ft: Thermal fuse
MI: Disconnection indicator

- **Type 1 + 2 + 3 surge protector**
- **In : 30 kA**
- **Iimp : 25 kA**
- **Low voltage Up**
- **Internal disconnection, status indicator and remote signaling**
- **EN 61643-11, IEC 61643-11 and UL1449 ed.4 compliance**

Characteristics

CITEL Model		DS250VG-690	DS253VG-690
Description		Type 1+2+3 AC surge protector - 1-pole	Type 1+2+3 AC surge protector - 3-phase
Network		400/690 V	400/690 V 3-phase
AC system		-	TNC/IT
Max. AC operating voltage	Uc	440 Vac	760 Vac
Temporary Over Voltage (TOV) Charasteristics - 5 sec.	UT	1050 Vac withstand	1050 Vac withstand
Temporary Over Voltage (TOV) Charasteristics - 120 mn	UT	1350 Vac withstand	1350 Vac withstand
Residual current *- Leakage current at Uc*	Ipe	None	None
Max. Load current *(if connection serie)*	IL	100 A	100 A
Follow current	If	None	None
Nominal discharge current *- 15 x 8/20 µs impulses*	In	30 kA	30 kA
Max. discharge current *-max. withstand @ 8/20 µs by pole*	Imax	100 kA	100 kA
Impulse current by pole *- max. withstand 10/350µs*	Iimp	25 kA	25 kA
Specific energy by pole	W/R	156 kJ/ohm	156 kJ/ohm
Total lightning current *- max. total withstand @ 10/350 µs*	Itotal	NA	75 kA
Withstand on Combination waveform *- Class III test*	Uoc	6 kV	6 kV
Protection level @ In	Up-in	4 kV	4 kV
Protection level	Up	4 kV	4 kV
Admissible short-circuit current	Isccr	50000 A	50000 A
Associated disconnectors			
Thermal disconnector		internal	
Fuses		Fuses type gG - 315 A	
Installation ground fault breaker		Type «S» or delayed	
Mechnical characteristics			
Dimensions		see diagram	
Connection to Network		By screw : 6-35 mm² (50mm² flexible)	
Disconnection indicator		1 mechanical indicator	1 mechanical indicator by pole
Remote signaling of disconnection		output on changeover contact	
Mounting		Symmetrical rail 35 mm (EN60715)	
Operating temperature		-40/+85°C	
Protection rating		IP20	
Housing material		Thermoplastic UL94-V0	
Standards compliance		IEC 61643-11 / EN 61643-11 / UL1449 ed.4	
Certification		EAC	
Part number		63162	3957

Type 1 + 2 + 3 AC Surge Protector
DUT250VG-300 series

CITEL

Iimp 25 kA

DUT250VG-300/G

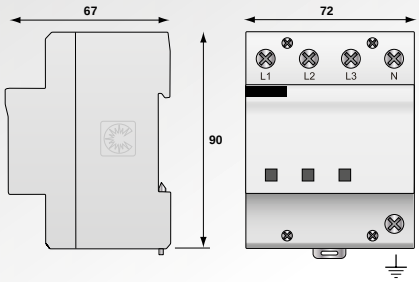

V: High-energy varistor network
GSG: Specific gas tube
GN: Heavy duty N/PE GDT
Ft: Thermal fuse
MI: Disconnection indicator

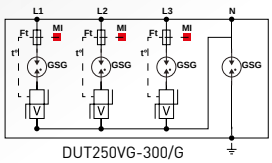

DUT250VG-300/G

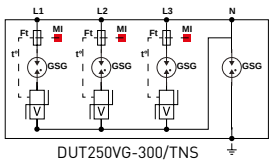

DUT250VG-300/TNS

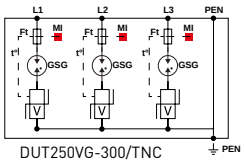

DUT250VG-300/TNC

- **Type 1 + 2 + 3, 3-phase surge protector**
- **Common and Differential mode**
- **Very compact monobloc enclosure**
- **Iimp by pole/total : 25 kA/50 kA**
- **Internal disconnection, status indicator**
- **Optimized to TOV**
- **EN 61643-11, IEC 61643-11 and UL1449 ed.4 compliance**

Characteristics

CITEL Model		DUT250VG-300/G	DUT250VG-300/TNS	DUT250VG-300/TNC
Description		Type 1+2+3 AC surge protector - 3-phase+N	Type 1+2+3 AC surge protector - 3-phase+N	Type 1+2+3 AC surge protector - 3-phase
Network		230/400 V 3-phase+N	230/400 V 3-phase+N	230/400 V 3-phase
AC system		TT-TNS	TNS	TNC
Max. AC operating voltage	Uc	255 Vac	255 Vac	255 Vac
Temporary Over Voltage (TOV) Charasteristics - 5 sec.	UT	335 Vac withstand	335 Vac withstand	335 Vac withstand
Temporary Over Voltage (TOV) Charasteristics - 120 mn	UT	440 Vac withstand	440 Vac withstand	440 Vac withstand
Temporary Over Voltage N/PE (TOV HT)	UT	1200 V/300A/200 ms withstand	-	-
Residual current - *Leakage current at Uc*	Ipe	None	None	None
Follow current	If	None	None	None
Nominal discharge current - *15 x 8/20 µs impulses*	In	40 kA	40 kA	40 kA
Max. discharge current -*max. withstand @ 8/20 µs by pole*	Imax	100 kA	100 kA	100 kA
Impulse current by pole - *max. withstand 10/350µs*	Iimp	25 kA	25 kA	25 kA
Specific energy by pole	W/R	156 kJ/ohm	156 kJ/ohm	156 kJ/ohm
Total lightning current - *max. total withstand @ 10/350 µs*	Itotal	50 kA	50 kA	75 kA
Withstand on Combination waveform - *Class III test*	Uoc	6 kV	6 kV	6 kV
Protection level @ In	Up-in	1.1 kV	1.1 kV	1.1 kV
Protection level	Up	1.5 kV	1.5 kV	1.5 kV
Admissible short-circuit current	Isccr	50000 A	50000 A	50000 A
Associated disconnectors				
Thermal disconnector		internal		
Fuses		Fuses type gG - 315 A		
Installation ground fault breaker		Type «S» or delayed		
Mechnical characteristics				
Dimensions		see diagram		
Connection to Network		By screw terminals : 6-35 mm² / by bus		
Disconnection indicator		Led indicators		
Remote signaling of disconnection		none		
Mounting		Symmetrical rail 35 mm (EN60715)		
Operating temperature		-40/+85°C		
Protection rating		IP20		
Housing material		Thermoplastic UL94-V0		
Standards compliance		IEC 61643-11 / EN 61643-11 / NF EN 61643-11 / UL1449 ed.4		
Certification		EAC		
Part number		3414	3597	3588

CE EAC

Type 1 + 2 + 3 AC Surge Protector
DS130VG series

CITEL

Iimp 12.5 kA

DS132VG-120

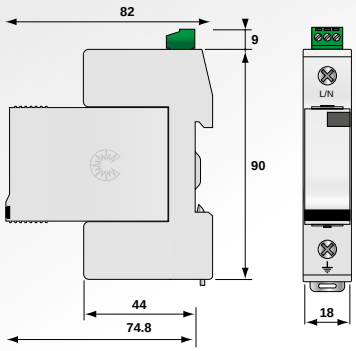

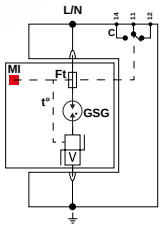

V: High energy MOV
GSG: Specific gas tube
Mi: Disconnection indicator
Ft: Thermal fuse
t°: Thermal disconnection mechanism
C : contac for remote signal

- **Type 1 + 2 + 3 AC surge protector**
- **In : 20 kA**
- **Iimp : 12,5 kA**
- **Pluggable module**
- **Remote signaling (option)**
- **Optimized to TOV**
- **EN 61643-11, IEC 61643-11 and UL1449 ed.4 compliance**

DS13x VGS-xxx/G

- « » = Configuration CT1 (common mode)
- «G» = Configuration CT2 (common and differential mode)
- Operating voltage
- «S» = Remote signal option
- «VG» = VG Technology
- Number of protected poles (1, 2, 3 o 4)

Characteristics

CITEL Model		DS131VG-230	DS131VG-120
Description		Type 1+2+3 AC surge protector - one-pole	
Network		230/400 V	120/208V
Max. AC operating voltage	Uc	255 Vac	150 Vac
Temporary Over Voltage (TOV) Charasteristics - 5 sec.	UT	335 Vac withstand	180 Vac withstand
Temporary Over Voltage (TOV) Charasteristics - 120 mn	UT	440 Vac withstand	230 Vac withstand
Residual current - *Leakage current at Uc*	Ipe	None	None
Follow current	If	None	None
Nominal discharge current - *15 x 8/20 µs impulses*	In	20 kA	20 kA
Max. discharge current -*max. withstand @ 8/20 µs by pole*	Imax	50 kA	50 kA
Impulse current by pole - *max. withstand 10/350µs*	Iimp	12.5 kA	12.5 kA
Specific energy by pole	W/R	40 kJ/ohm	40 kJ/ohm
Withstand on Combination waveform - *Class III test*	Uoc	6 kV	6 kV
Protection level @ In	Up-in	0.6 kV	0.4 kV
Protection level	Up	1.25 kV	1.25 kV
Admissible short-circuit current	Isccr	25000 A	25000 A
Associated disconnectors			
Thermal disconnector		internal	
Fuses		Fuses Type gG - 125 A	
Installation ground fault breaker		Type «S» or delayed	
Mechnical characteristics			
Dimensions		see diagram	
Connection to Network		By screw terminals: 2.5-25 mm² / by bus	
Disconnection indicator		1 mechanical indicator	
Remote signaling of disconnection		option DS131VGS-230 : output on changeover contact	option DS131VGS-120 : output on changeover contact
Spare unit		DSM130VG-230	DSM130VG-120
Mounting		Symmetrical rail 35 mm (EN60715)	
Operating temperature		-40/+85°C	
Protection rating		IP20	
Housing material		Thermoplastic UL94-V0	
Standards compliance		IEC 61643-11 / EN 61643-11 / UL1449 ed.4	
Certification		EAC	
Part number		571551	571651

CE EAC

Type 1 + 2 + 3 AC Multipolar Surge Protector
DS132VG, DS133VG, DS134VG

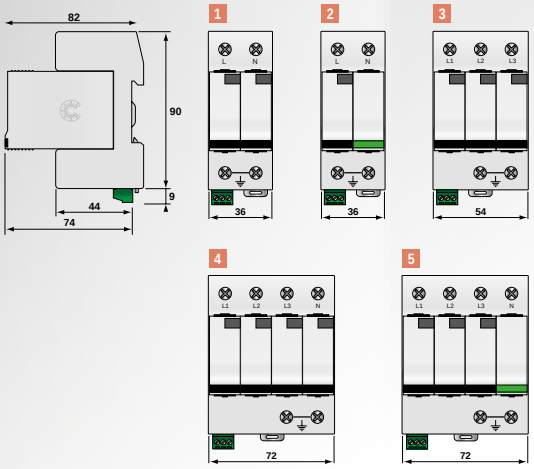

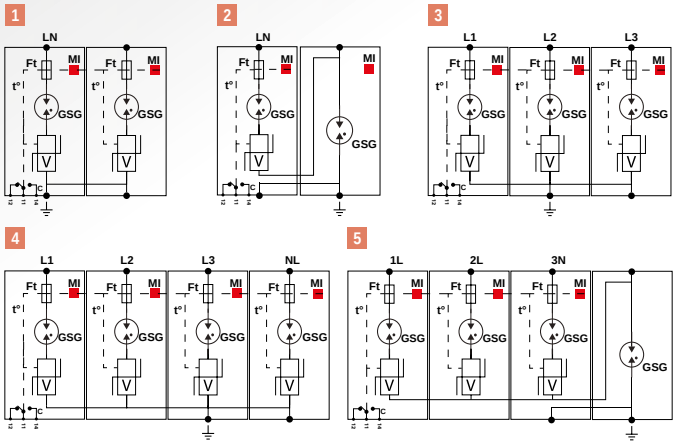

V: High energy MOV
GSG: Specific gas tube
Mi: Disconnection indicator
Ft: Thermal fuse
t°: Thermal disconnection mechanism
C: contac for remote signal

DS134VGS-230/G

Model	P/N	Network	AC system	Protection Mode	Itotal	Up L/PE	Up L/N	Up N/PE	Diagram
DS134VG-230/G	571564	230/400 V 3-phase+N	TT-TNS	L/N and N/PE	50 kA	-	1.25 kV	1.5 kV	5
DS134VG-120/G	571664	120/208 V 3-phase+N	TT-TNS	L/N and N/PE	50 kA	-	1.25 kV	1.5 kV	
DS134VG-230	571554	230/400 V 3-phase+N	TNS	L/PE and N/PE	50 kA	1.25 kV	-	1.25 kV	4
DS134VG-120	571654	120/208 V 3-phase+N	TNS	L/PE and N/PE	50 kA	1.25 kV	-	1.25 kV	
DS133VG-230	571563	230/400 V 3-phase	TNC	L/PE	37.5 kA	1.25 kV	-	-	3
DS133VG-120	571663	120/208 V 3-phase	TNC	L/PE	37.5 kA	1.25 kV	-	-	
DS132VG-230/G	571552	230 V single phase	TT-TN	L/N and N/PE	25 kA	-	1.25 kV	1.5 kV	2
DS132VG-120/G	571652	120 V single phase	TT-TN	L/N and N/PE	25 kA	-	1.25 kV	1.5 kV	
DS132VG-230	571562	230 V single phase	TN	L/PE and N/PE	25 kA	1.25 kV	-	1.25 kV	1
DS132VG-120	571662	120 V single phase	TN	L/PE and N/PE	25 kA	1.25 kV	-	1.25 kV	

Type 1 + 2 AC Surge Protector
DS130R series

CITEL

Iimp 12.5 kA

DS131R-400

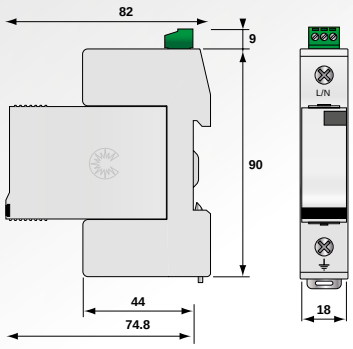

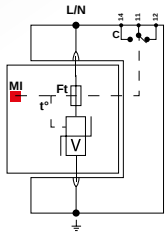

V: High energy MOV
Mi: Disconnection indicator
Ft: Thermal fuse
t°: Thermal disconnection mechanism
C: contac for remote signal

- **Type 1 + 2 AC power surge protector**
- **In : 20 kA**
- **Iimp : 12,5 kA**
- **Pluggable module for each phase**
- **Remote signaling (option)**
- **EN 61643-11, IEC 61643-11 and UL 1449 ed.4 compliance**

DS13x RS-xxx/G

- « » = Configuration CT1 (common mode)
- «G» = Configuration CT2 (common and differential mode)
- Operating voltage
- «S» = Remote signal option
- Number of protected poles (1, 2, 3 o 4)

Characteristics

CITEL Model		DS131R-400	DS131R-320	DS131R-280	DS131R-230	DS131R-120
Description		1+2 AC surge protector - 1-pole				
Network		230/400 V	230/400 V	230/400	230/400 V	120/208 V
Max. AC operating voltage	Uc	440 Vac	320 Vac	280 VAC	255 Vac	150 Vac
Temporary Over Voltage (TOV) Charasteristics - 5 sec.	UT	580 Vac withstand	335 Vac withstand	335 Vac withstand	335 Vac withstand	180 Vac withstand
Temporary Over Voltage (TOV) Charasteristics -120 mn	UT	770 Vac disconnection	440 Vac disconnection	440 Vac disconnection	440 Vac disconnection	230 Vac disconnection
Residual current - *Leakage current at Uc*	Ipe	< 1 mA	< 1 mA	< 1 mA	< 1 mA	< 1 mA
Follow current	If	None	None	None	None	None
Nominal discharge current - *15 x 8/20 µs impulses*	In	20 kA	20 kA	20 kA	20 kA	20 kA
Max. discharge current -*max. withstand (@ 8/20 µs by pole*	Imax	50 kA	50 kA	50 kA	50 kA	50 kA
Impulse current by pole - *max. withstand 10/350µs*	Iimp	12.5 kA	12.5 kA	12.5 kA	12.5 kA	12.5 kA
Specific energy by pole	W/R	40 kJ/ohm	40 kJ/ohm	40 kJ/ohm	40 kJ/ohm	40 kJ/ohm
Protection level	Up	1.7 kV	1.6 kV	1.3 kV	1.3 kV	0.9 kV
Admissible short-circuit current	Isccr	25000 A	25000 A	25000 A	25000 A	25000 A
Associated disconnectors						
Thermal disconnector		internal				
Fuses		Fuses Type gG - 125 A				
Installation ground fault breaker		Type "S" or delayed				
Mechnical characteristics						
Dimensions		see diagram				
Connection to Network		By screw terminals: 2.5-25 mm² / by bus				
Disconnection indicator		1 mechanical indicator				
Remote signaling of disconnection		option DS131RS-400 : output on changeover contact	option DS131RS-320 : output on changeover contact	Option DS131RS-280 : output on changeover contact	option DS131RS-230 : output on changeover contact	option DS131RS-120 : output on changeover contact
Spare unit		DSM130R-400	DSM130R-320	DSM130R-280	DSM130R-230	DSM130R-120
Mounting		Symmetrical rail 35 mm (EN60715)				
Operating temperature		-40/+85°C				
Protection rating		IP20				
Housing material		Thermoplastic UL94-V0				
Standards compliance		IEC 61643-11 / EN 61643-11 / UL1449 ed.4				
Certification		EAC				
Part number		571401	-	571101	571501	571601

CE EAC

Type 1 + 2 AC Multipolar Surge Protector
DS132R, DS133R, DS134R

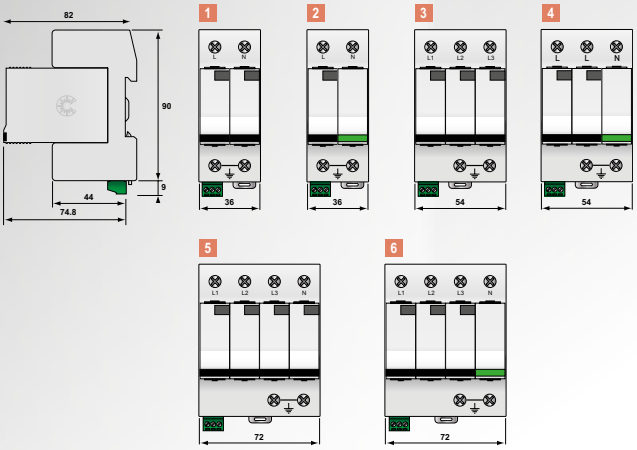

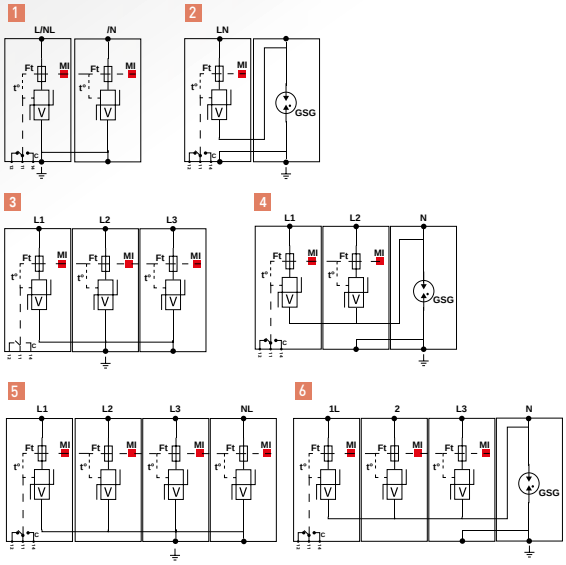

V: High energy MOV
GSG: Specific gas tube
Mi: Disconnection indicator
Ft: Thermal fuse
t°: Thermal disconnection mechanism
C: Contact for remote signal

DS134RS-230/G

Model	P/N	Network	AC system	Protection Mode	Itotal	Up L/PE	Up L/N	Up N/PE	Diagram
DS134R-280/G	571124	230/400 V 3-phase+N	TT-TNS	L/N and N/PE	50 kA	-	1.3 kV	1.5 kV	6
DS134R-230/G	571524	230/400 V 3-phase+N	TT-TNS	L/N and N/PE	50 kA	-	1.3 kV	1.5 kV	
DS134R-120/G	571624	120/208 V 3-phase+N	TT-TNS	L/N and N/PE	50 kA	-	0.9 kV	1.5 kV	
DS134R-400	571404	230/400 V 3 phase+N	IT	L/PE and N/PE	50 kA	1.7 kV	-	1.7 kV	5
DS134R-280	571104	230/400 V 3- phase+N	TNS	L/PE and N/PE	50 KA	1.3 kV		1.3 kV	
DS134R-230	571504	230/400 V 3-phase+N	TNS	L/PE and N/PE	50 kA	1.3 kV	-	1.3 kV	
DS134R-120	571604	120/208 V 3-phase+N	TNS	L/PE and N/PE	50 kA	0.9 kV	-	0.9 kV	
DS133R-120/G	-	120/208 V 2-phase+N	TNS	L/N and N/PE	50 kA	-	0.9 kV	1.5 kV	4
DS133R-400	571403	230/400 V 3-phase	IT	L/PE	37.5 kA	1.7 kV	-	-	3
DS133R-280	571103	230/400 V 3-phase	TNC	L/PE	37.5 kA	1.3 kV	-	-	
DS133R-230	571503	230/400 V 3-phase	TNC	L/PE	37.5 kA	1.3 kV	-	-	
DS133R-120	571603	120/208 V 3-phase	TNC	L/PE	37.5 kA	0.9 kV	-	-	
DS132R-280/G	571122	230 V single phase	TT-TN	L/PE and N/PE	25 kA		1.3 kV	1.5 kV	2
DS132R-230/G	571522	230 V single phase	TT-TN	L/N and N/PE	25 kA	-	1.3 kV	1.5 kV	
DS132R-120/G	571622	120 V single phase	TT-TN	L/N and N/PE	25 kA	-	0.9 kV	1.5 kV	
DS132R-400	571402	230 V single phase	IT	L/PE and N/PE	25 kA	1.7 kV	-	1.7 kV	1
DS132R-280	571102	230 V single phase	TN	L/PE and N/PE	25 kA	1.3 kV	-	1.3 kV	
DS132R-230	571502	230 V single phase	TN	L/PE and N/PE	25 kA	1.3 kV	-	1.3 kV	
DS132R-120	571602	120 V single phase	TN	L/PE and N/PE	25 kA	0.9 kV	-	0.9 kV	

Type 2 and Type 3 surge protectors

Type 2 Surge Protectors are designed to be installed at the origin of the Low Voltage system or close to sensitive equipment to protect against transient voltages coupled into the Low Voltage network. Surge Protectors are recommended or, in some cases, mandatory for some systems, especially when these systems are located in a high lightning area (Ng>2.5) or when supplied by overhead power lines. These Surge Protectors undergo NF EN 61643-11 Class II 8/20 µs discharge current tests.

These surge protectors are available in a wide range of versions to be adaptable to all configurations :

- Imax by pole : 10 up to 70 kA
- Single, 3 or 3-Phase+Neutral AC network
- DC network
- 230/400V or 120/208V AC network
- All AC system types
- Common mode protection (CT1 configuration)

or Common and Differential mode protection (CT2 configuration)

CITEL surge arresters Type 2 are offered mainly in pluggable version. Monobloc solutions are also available.

Arresters tested and found Type 3 are intended to be installed near sensitive equipment, in coordination with type 2 arrester installation head.

CITEL surge arresters Type 2 are based on the use of varistors. Version DS40VG uses «VG» technology.

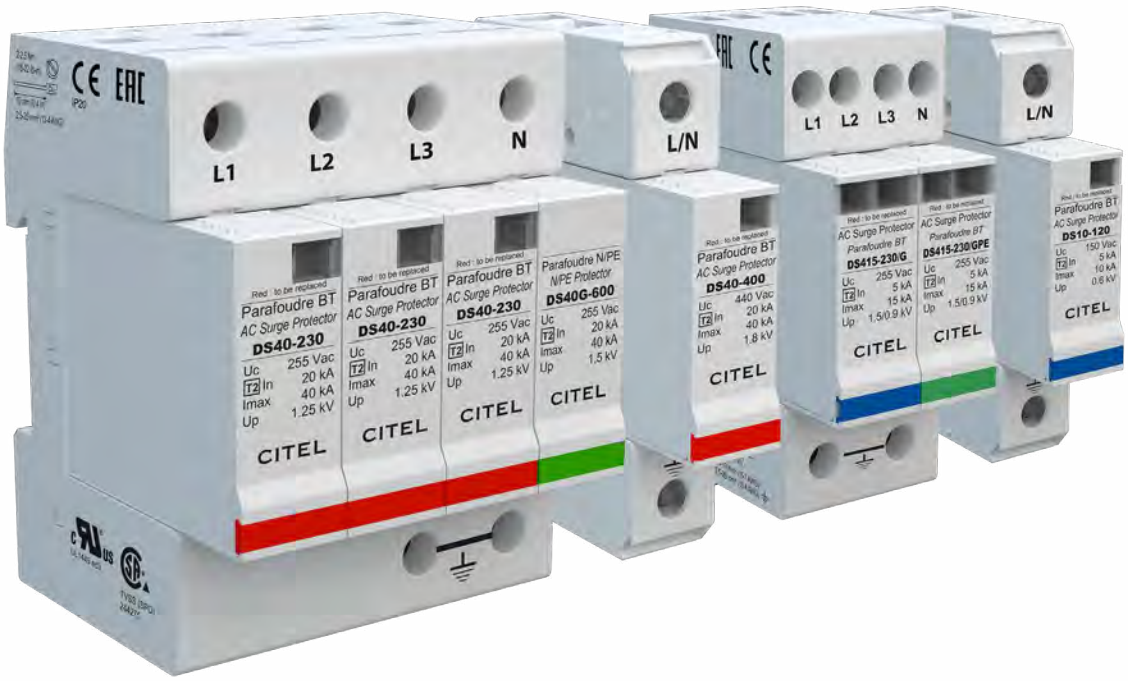

Standard surge protectors

Range		Description	Imax/ pole	Characteristics	Page
DS70R		Reinforced surge protector	70 kA	Type 2 High energy pluggable	43
DS40VG		Surge protector VG Technology	40 kA	Type 2 + 3 Very high efficiency pluggable	45
DS40		Standard surge protector	40 kA	Type 2 pluggable	47
DS10		Secondary surge protector	10 kA	Type 2 or 3 pluggable	49

Part number information

DS44 VGS-230/G

- « » = CT1 configuration (common mode)
- «G» = CT2 configuration (common and diff.)
- Operating voltage
- «S» = remote signaling
- «VG» = «GSG/MOV» technology
- «» = «Varistor» technology
- Number of protected poles (1, 2, 3 or 4)
- Imax by pole : **«1»**=10 kA
  «4»=40 kA
  «7»=70 kA

Compact surge protectors

Range		Description	Imax / pole	Characteristics	Page
DS240 **DS215**		Single phase surge protector	40 kA 15 kA	Single phase Compact Pluggable	51 53
DS440 **DS415**		3-phase+N surge protector	40 kA 15 kA	3-phase Compact Pluggable	52 54
DS98		Single phase surge protector	10 kA	Single phase Compact Monobloc	55
DS40HFS **DS-HF**		RFI filter surge pro-tector	10 to 40 kA	RFI filter	56 57
DS2x0-DC		DC surge protector	20 to 40 kA	DC network Compact Pluggable	58-59-60

Part number information

DS240 S-230/G

- « » = CT1 configuration (common mode)
- «G» = CT2 configuration (common and diff.)
- «DC» = Continuous voltage
- Operating voltage
- «S» = Remote signaling
- «HF» = RFI filter
- «40» or «15 » = Imax
- Number of protected poles

Type 2 AC Surge Protector
DS70R series

CITEL

Imax 70 kA

DS71R-230

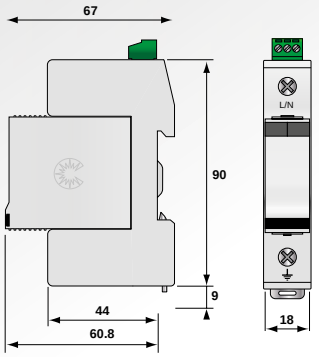

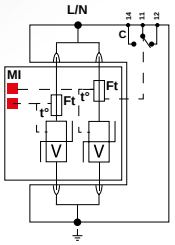

V: High energy varistor
Ft: Thermal Fuse
C: Remote signaling contact
t: Thermal disconnection system
MI: Disconnection indicator

- **Re-inforced Type 2 Surge Protector**
- **In : 30 kA**
- **Imax : 70 kA**
- **Pluggable module by phase**
- **Remote Signaling option**
- **IEC 61643-11 and EN 61643-11 compliance**
- **UL1449 ed.4**

DS7x RS-xxx

- Operating voltage
- «S» = Remote signal option
- Number of protected poles (1, 2, 3 or 4)

Characteristics

CITEL Model		DS71R-400	DS71R-230	DS71R-120
Description		Type 2 AC surge protector - unipolar		
Network		230/400V	230/400V	120/208V
Max. AC operating voltage	Uc	440 Vac	255 Vac	150 Vac
Temporary Over Voltage (TOV) Charasteristics - 5 sec.	UT	580 Vac withstand	335 Vac withstand	180 Vac withstand
Temporary Over Voltage (TOV) Charasteristics - 120 mn	UT	770 Vac disconnection	440 Vac disconnection	230 Vac disconnection
Residual current - *Leakage current at Uc*	Ipe	< 1 mA	< 1 mA	< 1 mA
Follow current	If	None	None	None
Nominal discharge current - *15 x 8/20 µs impulses*	In	30 kA	30 kA	30 kA
Max. discharge current -*max. withstand (i 8/20 µs by pole*	Imax	70 kA	70 kA	70 kA
Protection level	Up	1.8 kV	1.4 kV	1 kV
Admissible short-circuit current	Isccr	25000 A	25000 A	25000 A
Associated disconnectors				
Thermal disconnector		internal		
Fuses		Fuses Type gG - 100 A*		
Installation ground fault breaker		Type «S» or delayed		
Mechnical characteristics				
Dimensions		see diagram		
Connection to Network		By screw terminals: 2.5-25 mm² / by bus		
Disconnection indicator		2 mechanical indicators		
Remote signaling of disconnection		option DS71RS-400 : output on changeover contact	option DS71RS-230 : output on changeover contact	option DS71RS-120 : output on changeover contact
Spare unit		DSM70R-400	DSM70R-230	DSM70R-120
Mounting		Symmetrical rail 35 mm (EN60715)		
Operating temperature		-40/+85°C		
Protection rating		IP20		
Housing material		Thermoplastic UL94-V0		
Standards compliance		IEC 61643-11 / EN 61643-11 / UL1449 ed.4		
Certification		UL / CSA /EAC		
Part number		321401	3214011	321601

*: Rating in compliance with NF C15-100 art.534.1.3.5. In order to increase service continuity, higher rating can be used. For further information, please consult product instructions.

Type 2 AC Multipolar Surge Protector
DS72R, DS73R, DS74R

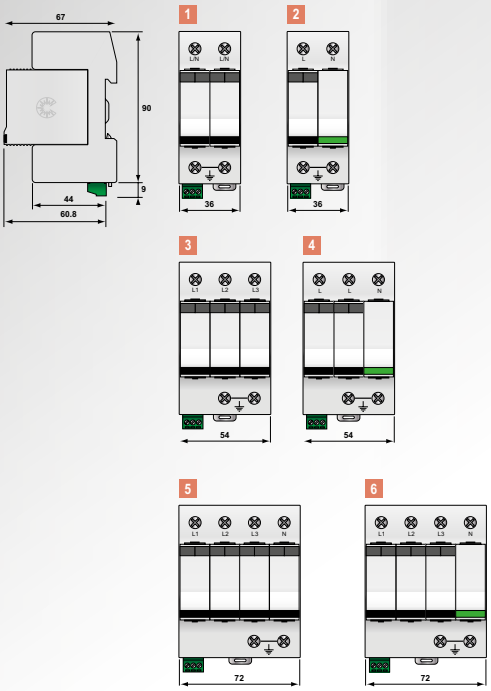

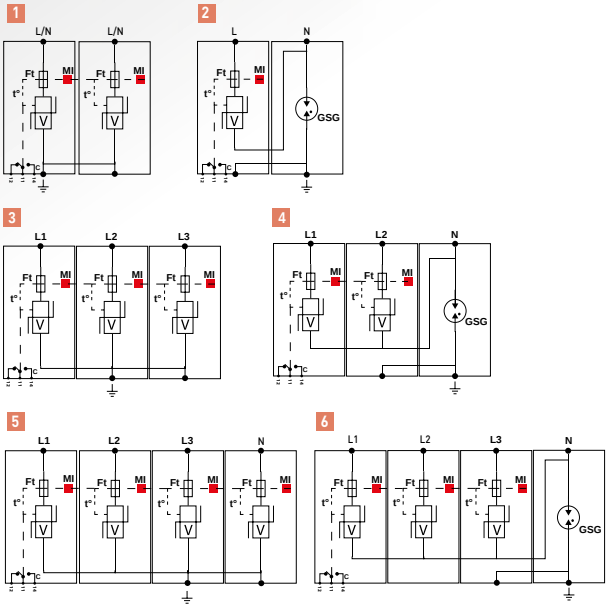

V: High energy varistor network
GSG: Specific gas tube
Ft: Thermal Fuse
C: Remote signaling contact
t: Thermal disconnection system
MI: Disconnection indicator

DS74RS-230

Model	P/N	Network	AC system	Protection Mode	Itotal	Up L/PE	Up L/N	Up N/PE	Diagram
DS74R-230/G	491512	230/400 V 3-phase+N	TT-TNS	L/N and N/PE	70 kA	-	1.4 kV	1.5 kV	6
DS74R-120/G	491612	120/208 V 3-phase+N	TT-TNS	L/N and N/PE	70 kA	-	1 kV	1.5 kV	
DS74R-400	491402	230/400 V 3-phase+N	IT	L/PE and N/PE	280kA	1.8 kV	-	1.8 kV	5
DS74R-230	491502	230/400 V 3-phase+N	TNS	L/PE and N/PE	280 kA	1.4 kV	-	1.4 kV	
DS74R-120	491602	120/208 V 3-phase+N	TNS	L/PE and N/PE	280 kA	1 kV	-	1 kV	
DS73R-120/G	-	120/208 V 2-phase+N	TNS	L/N and N/PE	70 kA	-	1 kV	1.5 kV	4
DS73R-400	491403	230/400 V 3-phase	IT	L/PE	210 kA	1.8 kV	-	-	3
DS73R-230	491503	230/400 V 3-phase	TNC	L/PE	210 kA	1.4 kV	-	-	
DS73R-120	491603	120/208 V 3-phase	TNC	L/PE	210 kA	1 kV	-	-	
DS72R-230/G	491511	230 V single phase	TT	L/N and N/PE	70 kA	-	1.4 kV	1.5 kV	2
DS72R-120/G	491611	120 V single phase	TT	L/N and N/PE	70 kA	-	1 kV	1.5 kV	
DS72R-400	491401	230 V single phase	IT	L/PE and N/PE	140 kA	1.8 kV	-	1.8 kV	1
DS72R-230	491501	230 V single phase	TN	L/PE and N/PE	140 kA	1.8 kV	-	1.4 kV	
DS72R-120	491601	120 V single phase	TN	L/PE and N/PE	140 kA	1.8 kV	-	1 kV	

Type 2 + 3 Surge Protector
DS40VG series

CITEL

Imax 40 kA

DS41VG-120

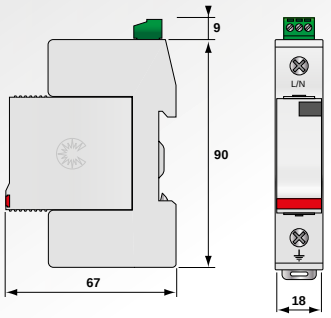

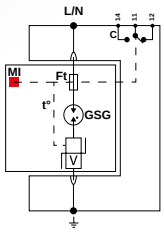

GSG: Specific GDT
V: Varistor
Ft: Thermal fuse
C: Remote signaling contact
t°: Disconnection system
Mi : Mechanical indicator

- **Type 2 + 3 surge protector**
- **In 20 kA / Imax 40 kA**
- **Pluggable module**
- **Follow and operating current : none**
- **No ageing**
- **Optional remote signaling state**
- **Optimized to TOV**
- **EN 61643-11, IEC 61643-11 and UL 1449 ed.4 compliance**

DS4x VGx-xxx/G

- « » = CT1 configuration (common mode)
- «G» = CT2 (common and differential mode)
- Operating voltage
- «S» = Remote signal option
- Number of protected poles (1, 2, 3 or 4)

Characteristics

CITEL Model		DS41VG-230	DS41VG-120
Description		Type 2+3 AC surge protector - one-phase - pluggable	
Network		230/400 V	120/208V
Max. AC operating voltage	Uc	255 Vac	150 Vac
Temporary Over Voltage (TOV) Charasteristics - 5 sec.	UT	335 Vac withstand	180 Vac withstand
Temporary Over Voltage (TOV) Charasteristics - 120 mn	UT	440 Vac withstand	230 Vac withstand
Residual current - *Leakage current at Uc*	Ipe	None	None
Follow current	If	None	None
Nominal discharge current - *15 x 8/20 µs impulses*	In	20 kA	20 kA
Max. discharge current -*max. withstand @ 8/20 µs by pole*	Imax	40 kA	40 kA
Withstand on Combination waveform - *Class III test*	Uoc	6 kV	6 kV
Protection level @ In	Up-in	0.8 kV	0.6 kV
Protection level	Up	1.25 kV	1.25 kV
Admissible short-circuit current	Isccr	25000 A	25000 A
Associated disconnectors			
Thermal disconnector		internal	
Fuses		Fuses Type gG - 50 A*	
Installation ground fault breaker		Type «S» or delayed	
Mechnical characteristics			
Dimensions		see diagram	
Connection to Network		By screw terminals: 2.5-25 mm² / by bus	
Disconnection indicator		1 mechanical indicator	
Remote signaling of disconnection		option DS41VGS-230 : output on changeover contact	option DS41VGS-120 : output on changeover contact
Spare unit		DSM40VG-230	DSM40VG-120
Mounting		Symmetrical rail 35 mm (EN60715)	
Operating temperature		-40/+85°C	
Protection rating		IP20	
Housing material		Thermoplastic UL94-V0	
Standards compliance		IEC 61643-11 / EN 61643-11 / UL1449 ed.4	
Certification		EAC	
Part number		331751	331651

*: Rating in compliance with NF C15-100 art.534.1.3.5.
In order to increase service continuity, higher rating can be used. For further information, please consult product instructions.

CE EAC

Type 2 + 3 AC Multipolar Surge Protector
DS42VG, DS43VG, DS44VG

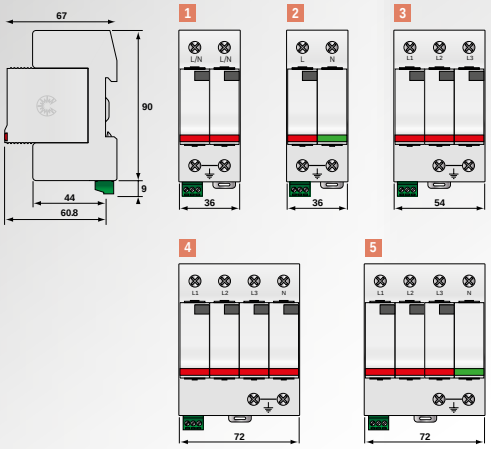

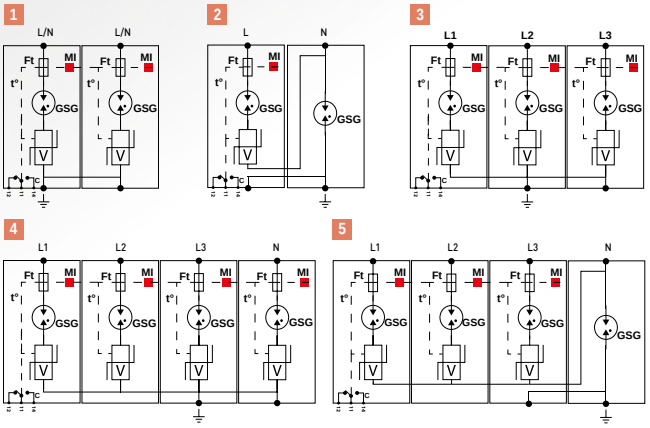

GSG: Specific GDT
V: Varistor
Ft: Thermal fuse
C: Remote signaling contact
t°: Disconnection system
Mi : Mechanical indicator

DS44VG-230/G

Model	P/N	Network	AC system	Protection Mode	Itotal	Up L/PE	Up L/N	Up N/PE	Diagram
DS44VG-230/G	461562	230/400 V 3-phase+N	TT-TNS	L/N and N/PE	100 kA	-	1.25 kV	1.5 kV	5
DS44VG-120/G	461662	120/208 V 3-phase+N	TT-TNS	L/N and N/PE	100 kA	-	1.25 kV	1.5 kV	
DS44VG-230	461552	230/400 V 3-phase+N	TNS	L/PE and N/PE	160 kA	1.25 kV	-	1.25 kV	4
DS44VG-120	461652	120/208 V 3-phase+N	TNS	L/PE and N/PE	160 kA	1.25 kV	-	1.25 kV	
DS43VG-230	461553	230/400V 3-phase	TNC	L/PE	120 kA	1.25 kV	-	-	3
DS43VG-120	461653	120/208V 3-phase	TNC	L/PE	120 kA	1.25 kV	-	-	
DS42VG-230/G	461561	230 V single phase	TT-TN	L/N and N/PE	80 kA	-	1.25 kV	1.5 kV	2
DS42VG-120/G	461661	120V single phase	TT-TN	L/N and N/PE	80 kA	-	1.25 kV	1.5 kV	
DS42VG-230	461551	230V single phase	TN	L/PE and N/PE	80 kA	1.25 kV	-	1.25 kV	1
DS42VG-120	461651	120V single phase	TN	L/PE and N/PE	80 kA	1.25 kV	-	1.25 kV	

Type 2 AC Surge Protector
DS40 series

CITEL

Imax 40 kA

DS41-230

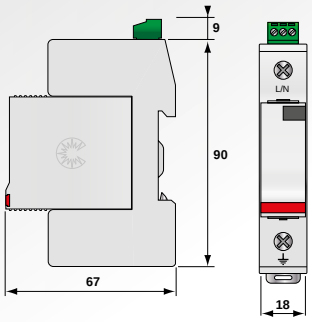

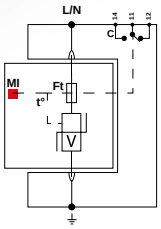

V: High-energy varistor
Ft: Thermal fuse
C: Remote signaling contact
t°: Thermal disconnection system
Mi : Disconnection indicator

- **Type 2 AC Surge Protector**
- **In : 20 kA**
- **Imax : 40 kA**
- **Pluggable module for each phase**
- **Remote signaling option**
- **IEC 61643-11 and EN 61643-11 compliance**
- **UL1449 ed.4**

DS4x S-xxx/G

« » = CT1 configuration (common mode)
«G» = CT2 (common and differential mode)
Operating voltage
«S» = Remote signal option
Number of protected poles (1, 2, 3 or 4)

Characteristics

CITEL Model		DS41-690	DS41-600	DS41-480	DS41-400	DS41-230	DS41-120
Description		Type 2 AC surge protector - one-phase - pluggable					
Network		400/690V	347/600V	277/480V	230/400 V	230/400 V	120/208V
Max. AC operating voltage	Uc	760 Vac	660 Vac	530 Vac	440 Vac	255 Vac	150 Vac
Temporary Over Voltage (TOV) Charasteristics - *5 sec.*	UT	1000 Vac withstand	870 Vac withstand	700 Vac withstand	580 Vac withstand	335 Vac withstand	180 Vac withstand
Temporary Over Voltage (TOV) Charasteristics - *120 mn*	UT	1325 Vac disconnection	1150 Vac disconnection	920 Vac disconnection	770 Vac disconnection	440 Vac disconnection	230 Vac disconnection
Residual current - *Leakage current at Uc*	Ipe	< 1 mA	< 1 mA	< 1 mA	< 1 mA	< 1 mA	< 1 mA
Follow current	If	None	None	None	None	None	None
Nominal discharge current - *15 x 8/20 µs impulses*	In	20 kA	20 kA	20 kA	20 kA	20 kA	20 kA
Max. discharge current -*max. withstand @ 8/20 µs by pole*	Imax	40 kA	40 kA	40 kA	40 kA	40 kA	40 kA
Protection level	Up	3.5 kV	3.2 kV	2.5 kV	1.8 kV	1.25 kV	0.9 kV
Admissible short-circuit current	Isccr	25000 A	25000 A	25000 A	25000 A	25000 A	25000 A
Associated disconnectors							
Thermal disconnector		internal					
Fuses		Fuses Type gG - 50 A*					
Installation ground fault breaker		Type «S» or delayed					
Mechnical characteristics							
Dimensions		see diagram					
Connection to Network		By screw terminals: 2.5-25 mm² / by bus					
Disconnection indicator		1 mechanical indicator					
Remote signaling of disconnection		option DS41S-690 : output on changeover contact	option DS41S-600 : output on changeover contact	option DS41S-480 : output on changeover contact	option DS41S-400 : output on changeover contact	option DS41S-230 : output on changeover contact	option DS41S-120 : output on changeover contact
Spare unit		DSM40-690	DSM40-600	DSM40-480	DSM40-400	DSM40-230	DSM40-120
Mounting		Symmetrical rail 35 mm (EN60715)					
Operating temperature		-40/+85°C					
Protection rating		IP20					
Housing material		Thermoplastic UL94-V0					
Standards compliance		IEC 61643-11 / EN 61643-11 / UL1449 ed.4					
Certification		UL / CSA /EAC / TUV	UL / CSA /EAC	UL / CSA /EAC	UL / CSA /EAC /TUV	UL / CSA /EAC / TUV	UL / CSA /EAC
Part number		331801	331501	331001	3314011	3317011	3316011

* : Rating in compliance with NF C15-100 art.534.1.5.3. In order to increase service continuity, higher rating can be used. For further information, please consult product instructions..

Type 2 Multipolar Surge Protector
DS42, DS43, DS44

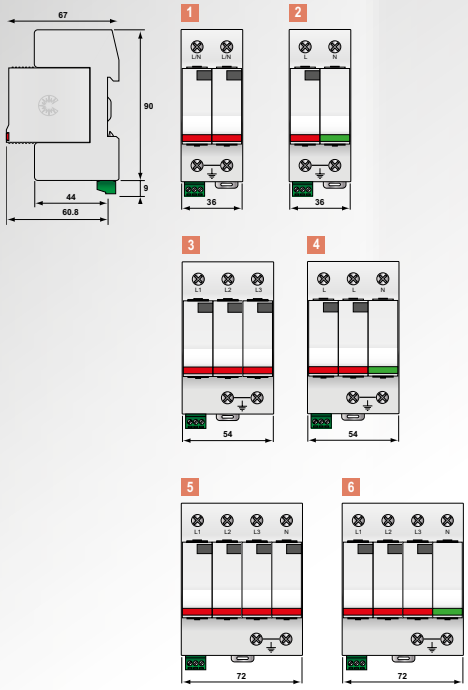

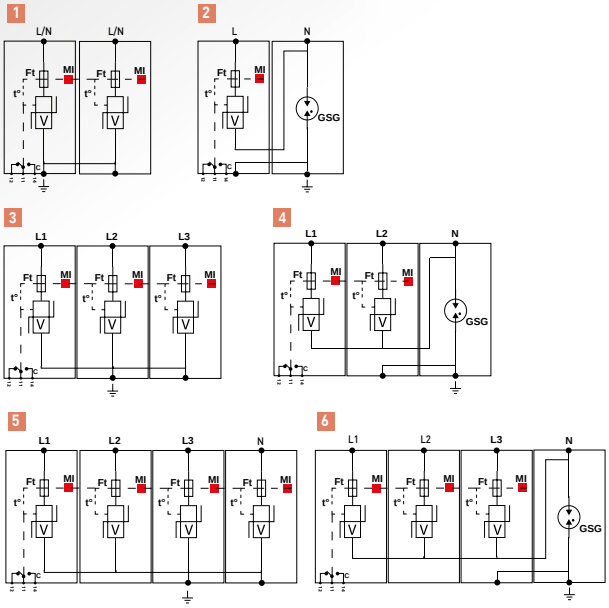

V: High-energy varistor
GSG: Specific gas tube
Ft: Thermal fuse
C: Remote signaling contact
t°: Thermal disconnection system
Mi: Disconnection indicator

DS44-230/G

Model	P/N	Network	AC system	Protection Mode	Itotal	Up L/PE	Up L/N	Up N/PE	Diagram
DS44-230/G	461512	230/400 V 3-phase+N	TT-TNS	L/N and N/PE	40 kA	-	1.25 kV	1.5 kV	6
DS44-120/G	461612	230/400 V 3-phase+N	TT-TNS	L/N and N/PE	40 kA	-	0.9 kV	1.5 kV	
DS44-400	461402	230/400 V 3-phase+N	IT	L/PE and N/PE	160 kA	1.8 kV	-	1.8 kV	5
DS44-230	461502	230/400 V 3-phase+N	TNS	L/PE and N/PE	160 kA	1.25 kV	-	1.25 kV	
DS44-120	461602	120/208 V 3-phase+N	TNS	L/PE and N/PE	160 kA	0.9 kV	-	0.9 kV	
DS43-120/G	-	120/208 V 2-phase+N	TNS	L/N et N/PE	40 kA	-	0.9 kV	1.5 kV	4
DS43-400	461403	230/400 V 3-phase	IT	L/PE	120 kA	1.8 kV	-	-	3
DS43-230	461503	230/400 V 3-phase	TNC	L/PE	120 kA	1.25 kV	-	-	
DS43-120	461603	120/208 V 3-phase	TNC	L/PE	120 kA	0.9 kV	-	-	
DS42-230/G	461511	230 V single phase	TT-TN	L/N and N/PE	40 kA	-	1.25 kV	1.5 kV	2
DS42-120/G	461611	120 V single phase	TT-TN	L/N and N/PE	40 kA	-	0.9 kV	1.5 kV	
DS42-400	461401	230 V single phase	IT	L/PE and N/PE	80 kA	1.8 kV	-	1.8 kV	1
DS42-230	461501	230 V single phase	TN	L/PE and N/PE	80 kA	1.25 kV	-	1.25 kV	
DS42-120	461601	120 V single phase	TN	L/PE and N/PE	80 kA	0.9 kV	-	0.9 kV	

Type 2 (or 3) AC Surge Protector
DS10 series

CITEL

Imax 10 kA

DS11-120

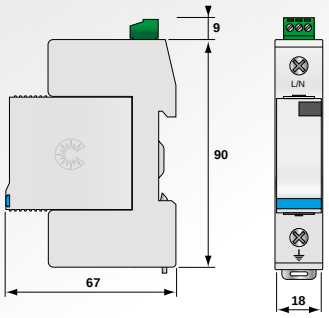

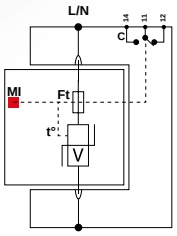

V : Varistor
Ft : Thermal fuse
C : Remote signaling contact
t° : Thermal disconnection system
MI : Disconnection indicator

- **Type 2 (or 3) Surge Protector**
- **In : 5 kA**
- **Imax : 10 kA**
- **Pluggable module by phase**
- **Remote signaling option**
- **IEC 61643-11, EN 61643-11 and UL1449 ed.4 compliance**

DS1x S-xxx/G

- « » = CT1 configuration (common mode)
- «G» = CT2 (common and differential mode)
- Operating voltage
- «S» = Remote signal option
- Number of protected poles (1, 2, 3 or 4)

Characteristics

CITEL Model		DS11-400	DS11-230	DS11-120
Description		Type 2 (or 3) AC surge protector - one-phase		
Network		230/400 V	230/400 V	120/208 V
Max. AC operating voltage	Uc	440 Vac	255 Vac	150 Vac
Temporary Over Voltage (TOV) Charasteristics - 5 sec.	UT	580 Vac withstand	335 Vac withstand	180 Vac withstand
Temporary Over Voltage (TOV) Charasteristics - 120 mn	UT	770 Vac disconnection	440 Vac disconnection	230 Vac disconnection
Residual current - *Leakage current at Uc*	Ipe	< 1 mA	< 1 mA	< 1 mA
Follow current	If	None	None	None
Nominal discharge current - *15 x 8/20 µs impulses*	In	5 kA	5 kA	5 kA
Max. discharge current -*max. withstand (i 8/20 µs by pole*	Imax	10 kA	10 kA	10 kA
Withstand on Combination waveform - *Class III test*	Uoc	10 kV	10 kV	10 kV
Protection level	Up	1.3 kV	0.9 kV	0.6 kV
Admissible short-circuit current	Isccr	25000 A	25000 A	25000 A
Associated disconnectors				
Thermal disconnector		internal		
Fuses		Fuses Type gG - 20 A*		
Installation ground fault breaker		Type «S» or delayed		
Mechnical characteristics				
Dimensions		see diagram		
Connection to Network		By screw terminals: 2.5-25 mm² / by bus		
Disconnection indicator		1 mechanical indicator		
Remote signaling of disconnection		option DS11S-400 : output on changeover contact	option DS11S-230 : output on changeover contact	option DS11S-120 : output on changeover contact
Spare unit		DSM10-400	DSM10-230	DSM10-120
Mounting		Symmetrical rail 35 mm (EN60715)		
Operating temperature		-40/+85°C		
Protection rating		IP20		
Housing material		Thermoplastic UL94-V0		
Standards compliance		IEC 61643-11 / EN 61643-11 / UL1449 ed.4		
Certification		EAC		
Part number		341401	341501	341601

* : Rating in compliance with NF C15-100 art.534.1.5.3. In order to increase service continuity, higher rating can be used. For further information, please consult product instructions.

CE EAC

Type 2 (or 3) Multipolar Surge Protector
DS12, DS13, DS14

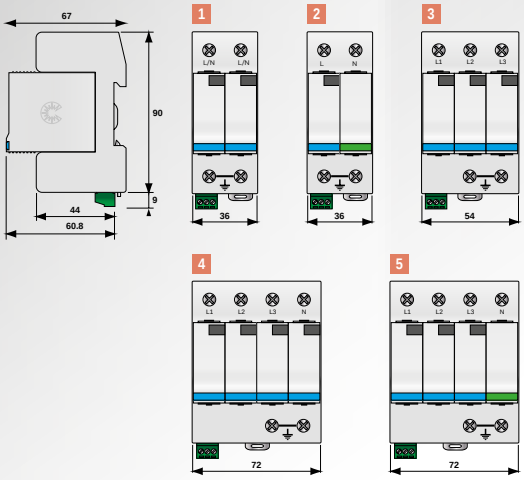

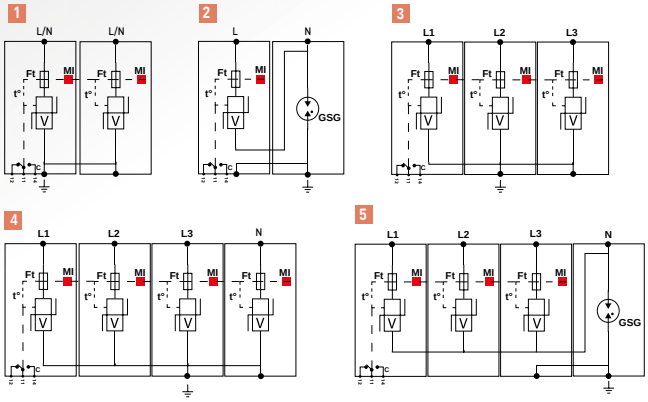

V : Varistor high energy
GSG: Specific gas tube
Ft : Thermal fuse
C : Remote signaling contact
t° : Thermal disconnection system
MI : Disconnection indicator

DS14S-230/G

Model	P/N	Network	AC system	Protection Mode	Itotal	Up L/PE	Up L/N	Up N/PE	Diagram
DS14-230/G	471512	230/400 V 3-phase+N	TT-TNS	L/N and N/PE	40 kA	-	0.9 kV	1.5 kV	5
DS14-120/G	471612	120/208 V 3-phase+N	TT-TNS	L/N and N/PE	40 kA	-	0.6 kV	1.5 kV	
DS14-400	471402	230/400 V 3-phase+N	IT	L/PE	40 kA	1.3 kV	-	1.3 kV	4
DS14-230	471502	230/400 V 3-phase+N	TNS	L/PE and N/PE	40 kA	0.9 kV	-	0.9 kV	
DS14-120	471602	120/208 V 3-phase+N	TNS	L/PE and N/PE	40 kA	0.6 kV	-	0.6 kV	
DS13-400	341403	230/400 V 3-phase	IT	L/PE	30 kA	1.3 kV	-	-	3
DS13-230	341503	230/400 V 3-phase	TNC	L/PE	30 kA	0.9 kV	-	-	
DS13-120	341603	120/208 V 3-phase	TNC	L/PE	30 kA	0.6 kV	-	-	
DS12-230/G	471511	230 V single phase	TT-TN	L/N and N/PE	20 kA	-	0.9 kV	1.5 kV	2
DS12-120/G	471611	120 V single phase	TT-TN	L/N and N/PE	20 kA	-	0.6 kV	1.5 kV	
DS12-400	471401	230 V single phase	IT	L/PE	20 kA	1.3 kV	-	1.3 kV	1
DS12-230	471501	230 V single phase	TN	L/PE and N/PE	20 kA	0.9 kV	-	0.9 kV	
DS12-120	471601	120 V single phase	TN	L/PE and N/PE	20 kA	0.6 kV	-	0.6 kV	

1-phase Type 2 Surge Protector
DS240 series

CITEL

Imax 40 kA

DS240-400

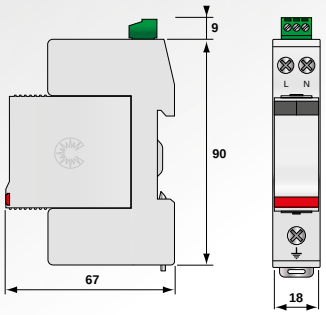

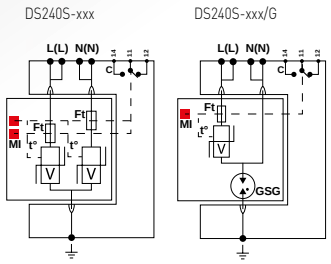

V : High energy varistor
GSG : Specific GDT
Ft : Thermal fuse
C : Remote signaling contact
t° : Thermal disconnection system
MI: Disconnection indicator

- **Compact single-phase Type 2**
- **In : 20 kA**
- **Imax : 40 kA**
- **Common/Differential mode**
- **Pluggable module**
- **Remote signaling contact (option)**
- **Complies with EN 61643-11 and IEC 61643-11**
- **UL1449 ed.4**

DS240 S-xxx/G

- « » = CT1 configuration (common mode)
- «G» = CT2 (common and differential mode)
- Operating voltage
- «S» = Remote signal option
- Imax 40 kA
- 2 protected poles

Characteristics

CITEL Model		DS240-400	DS240-230	DS240-230/G	DS240-120	DS240-120/G
Description		Compact 1-phase Type 2 Surge Protector - 230 V - Pluggable			Compact 1-phase Type 2 Surge Protector - 120 V - Pluggable	
Network		230 V single phase	230 V single phase	230 V single phase	120 V single phase	120 V single phase
Connection mode		L/PE and N/PE	L/PE and N/PE	L/N and N/PE	L/PE and N/PE	L/N and N/PE
AC system		IT	TN	TT-TN	TN	TT-TN
Max. AC operating voltage	Uc	440 Vac	255 Vac	255 Vac	150 Vac	150 Vac
Temporary Over Voltage (TOV) *Charasteristics - 5 sec.*	UT	580 Vac withstand	335 Vac withstand	335 Vac withstand	180 Vac withstand	180 Vac withstand
Temporary Over Voltage (TOV) *Charasteristics - 120 mn*	UT	770 Vac disconnection	440 Vac disconnection	440 Vac disconnection	230 Vac disconnection	230 Vac disconnection
Temporary Over Voltage N/PE (TOV HT)	UT	-	-	1200 V/300A/200 ms withstand	-	1200 V/300A/200 ms withstand
Residual current *- Leakage current at Uc*	Ipe	< 1 mA	< 1 mA	None	< 1 mA	None
Max. Load current *(if connection serie)*	IL	20 A	20 A	20 A	20 A	20 A
Follow current	If	None	None	None	None	None
Nominal discharge current *- 15 x 8/20 µs impulses*	In	20 kA	20 kA	20 kA	20 kA	20 kA
Max. discharge current *-max. withstand @ 8/20 µs by pole*	Imax	40 kA	40 kA	40 kA	40 kA	40 kA
Protection level CM/DM* *@In (8/20µs) and @ 6kV (1.2/50µs)*	Up	1.8 kV	1.25 kV	1.5/1.25 kV	0.9 kV	1.5/0.9 kV
Admissible short-circuit current	Isccr	10000 A	10000 A	10000 A	10000 A	10000 A
Associated disconnectors						
Thermal disconnector		internal				
Fuses		Fuses Type gG - 50 A**				
Installation ground fault breaker		Type "S" or delayed				
Mechnical characteristics						
Dimensions		see diagram				
Connection to Network		by screw terminals: 1.5-10mm² (L/N) or 2.5-25mm² (PE)				
Disconnection indicator		2 mechanical indicators	2 mechanical indicators	1 mechanical indicator	2 mechanical indicators	1 mechanical indicator
Remote signaling of disconnection		Option DS240S-400 : output on changeover contact	Option DS240S-230 : output on changeover contact	Option DS240S-230/G : output on changeover contact	Option DS240S-120 : output on changeover contact	Option DS240S-120/G : output on changeover contact
Spare unit		DSM240-400	DSM240-230	DSM240-230/G	DSM240-120	DSM240-120/G
Mounting		Symmetrical rail 35 mm (EN60715)				
Operating temperature		-40/+85°C				
Protection rating		IP20				
Housing material		Thermoplastic UL94-V0				
Standards compliance		IEC 61643-11 / EN 61643-11 / UL1449 ed.4 / EN 50539-11				
Certification		UL / CSA /EAC	UL / CSA /EAC	UL / CSA /EAC / TUV SUD	UL / CSA /EAC	UL / CSA /EAC
Part number		311401	311701	311721	311601	311621

*Note: CM = Common mode (L/PE or N/PE)/ DM = Differential mode (L/N)
**Note: Rating in compliance with NF C15-100 art. 534.1.5.3. An order to increase service continuity, higher rating can be used. For further information, please consult product instructions.

3-phase Type 2 Surge Protector
DS440 series

CITEL

Imax 40 kA

DS440-400

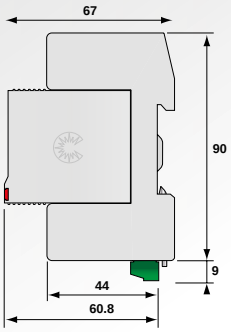

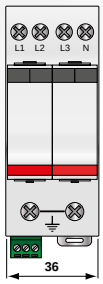

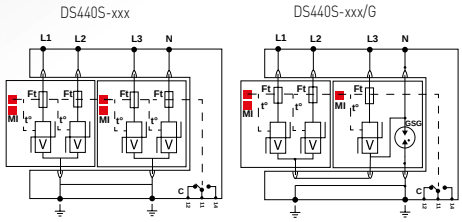

V : High energy varistor
GSG : Specific GDT
Ft : Thermal fuse
C : Remote signaling contact
t° : Thermal disconnection system
MI : Disconnection indicator

- **Compact 3-phase Type 2**
- **In : 20 kA**
- **Imax : 40 kA**
- **Common/Differential mode**
- **Pluggable module**
- **Remote signaling contact (option)**
- **Complies with EN 61643-11, IEC 61643-11 and UL1449 ed.4**

DS440 S-xxx/G

- « » = CT1 configuration (common mode)
- «G» = CT2 (common and differential mode)
- Operating voltage
- «S» = Remote signal option
- Imax 40 kA
- 4 protected poles

Characteristics

CITEL Model		DS440-400	DS440-230	DS440-230/G	DS440-120	DS440-120/G
Description		Compact 3-phase+N Type 2 surge protector - 230/400 V - Pluggable			Compact 3-phase+N Type 2 surge protector - 120/208 V - Pluggable	
Network		230/400 V 3-phase	230/400 V 3-phase	230/400 V 3-phase	120/208 V 3-phase	120/208 V 3-phase
Connection mode		L/PE and N/PE	L/PE and N/PE	L/N and N/PE	L/PE and N/PE	L/N and N/PE
AC system		IT	TN	TT-TN	TN	TT-TN
Max. AC operating voltage	Uc	440 Vac	255 Vac	255 Vac	150 Vac	150 Vac
Temporary Over Voltage (TOV) *Charasteristics - 5 sec.*	UT	580 Vac withstand	335 Vac withstand	335 Vac withstand	180 Vac withstand	180 Vac withstand
Temporary Over Voltage (TOV) *Charasteristics - 120 mn*	UT	770 Vac disconnection	440 Vac disconnection	440 Vac disconnection	230 Vac disconnection	230 Vac disconnection
Temporary Over Voltage N/PE (TOV HT)	UT	-	-	1200 V/300A/200 ms withstand	-	1200 V/300A/200 ms withstand
Residual current *- Leakage current at Uc*	Ipe	< 1 mA	< 1 mA	None	< 1 mA	None
Follow current	If	None	None	None	None	None
Nominal discharge current *- 15 x 8/20 µs impulses*	In	20 kA	20 kA	20 kA	20 kA	20 kA
Max. discharge current *-max. withstand @ 8/20 µs by pole*	Imax	40 kA	40 kA	40 kA	40 kA	40 kA
Protection level CM/DM* *@In (8/20µs) and @ 6kV (1.2/50µs)*	Up	1.8 kV	1.25 kV	1.5/1.25 kV	0.9 kV	1.5/0.9 kV
Admissible short-circuit current	Isccr	10000 A	10000 A	10000 A	10000 A	10000 A
Associated disconnectors						
Thermal disconnector		internal				
Fuses		Fuses Type gG - 50 A**				
Installation ground fault breaker		Type "S" or delayed				
Mechnical characteristics						
Dimensions		see diagram				
Connection to Network		by screw terminals: 1.5-10mm² (L/N) or 2.5-25mm² (PE)				
Disconnection indicator		4 mechanical indicators	4 mechanical indicators	3 mechanical indicators	4 mechanical indicators	3 mechanical indicators
Remote signaling of disconnection		Option DS440S-400 : output on changeover contact	Option DS440S-230 : output on changeover contact	Option DS440S-230/G : output on changeover contact	Option DS440S-120 : output on changeover contact	Option DS440S-120/G : output on changeover contact
Spare unit		DSM440-400	DSM440-230	DSM440-230/G and DSM440-230/GPE	DSM440-120	DSM440-120/G and DSM440-120/GPE
Mounting		Symmetrical rail 35 mm (EN60715)				
Operating temperature		-40/+85°C				
Protection rating		IP20				
Housing material		Thermoplastic UL94-V0				
Standards compliance		IEC 61643-11 / EN 61643-11 / UL1449 ed.4				
Certification		EAC				
Part number		311402	311702	311722	311602	311622

*Note: CM = Common mode (L/PE or N/PE)/ DM = Differential mode (L/N)
**Note: Rating in compliance with NF C15-100 art. 534.1.5.3. An order to increase service continuity, higher rating can be used. For further information, please consult product instructions.

CE EAC

1-phase Type 2 (or 3)Surge Protector
DS215 series

CITEL

Imax 15 kA

DS215-230

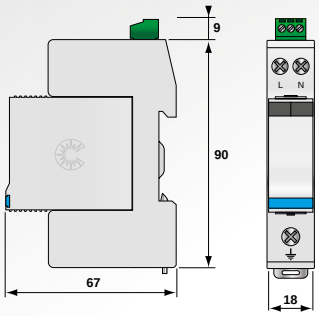

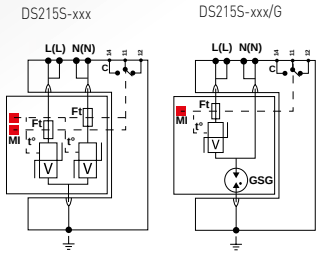

- **Compact single-phase SPD**
- **In : 5 kA**
- **Imax : 15 kA**
- **Common/Differential mode**
- **Pluggable module**
- **Remote signaling contact (option)**
- **IEC 61643-11 and EN 61643-11 compliance**
- **UL1449 ed.4**

DS215 S-xxx/G

- « » = CT1 configuration (common mode)
- «G» = CT2 (common and differential mode)
- Operating voltage
- «S» = Remote signal option
- Imax 15 Ka
- 2 protected poles

Characteristics

CITEL Model		DS215-400	DS215-230	DS215-230/G	DS215-120	DS215-120/G
Description		Compact 1-phase Type 2 (or 3) surge protector - 230 V -Pluggable			Compact 1-phase Type 2 (or 3) surge protector - 120 V -Pluggable	
Network		230 V single phase	230 V single phase	230 V single phase	230 V single phase	120 V single phase
Connection mode		L/PE and N/PE	L/PE and N/PE	L/N and N/PE	L/PE and N/PE	L/N and N/PE
AC system		IT	TN	TT-TN	TN	TT-TN
Max. AC operating voltage	Uc	440 Vac	255 Vac	255 Vac	150 Vac	150 Vac
Temporary Over Voltage (TOV) *Charasteristics - 5 sec.*	UT	580 Vac withstand	335 Vac withstand	335 Vac withstand	180 Vac withstand	180 Vac withstand
Temporary Over Voltage (TOV) *Charasteristics - 120 mn*	UT	770 Vac disconnection	440 Vac disconnection	440 Vac disconnection	230 Vac disconnection	230 Vac disconnection
Temporary Over Voltage N/PE (TOV HT)	UT	-	-	1200 V/300A/200 ms withstand	-	1200 V/300A/200 ms withstand
Residual current *- Leakage current at Uc*	Ipe	< 1 mA	< 1 mA	None	< 1 mA	None
Max. Load current *(if connection serie)*	IL	20 A	20 A	20 A	20 A	20 A
Follow current	If	None	None	None	None	None
Nominal discharge current *- 15 x 8/20 µs impulses*	In	5 kA	5 kA	5 kA	5 kA	5 kA
Max. discharge current *-max. withstand @ 8/20 µs by pole*	Imax	15 kA	15 kA	15 kA	15 kA	15 kA
Withstand on overvoltages IEEE C62.41.1	Uoc	10 kV	10 kV	10 kV	10 kV	10 kV
Protection level CM/DM* *@In (8/20µs) and @ 6kV (1.2/50µs)*	Up	1.3 kV	0.9 kV	1.5/0.9 kV	0.6 kV	1.5/0.6 kV
Admissible short-circuit current	Isccr	10000 A	10000 A	10000 A	10000 A	10000 A
Associated disconnectors						
Thermal disconnector		internal				
Fuses		Fuses type gG - 20A**				
Installation ground fault breaker		Type "S" or delayed				
Mechnical characteristics						
Dimensions		see diagram				
Connection to Network		by screw terminals: 1.5-10mm² (L/N) or 2.5-25mm² (PE)				
Disconnection indicator		2 mechanical indicators		1 mechanical indicator	2 mechanical indicators	1 mechanical indicator
Remote signaling of disconnection		Option DS215S-400 : output on changeover contact	Option DS215S-230 : output on changeover contact	Option DS215S-230/G : output on changeover contact	Option DS215S-120 : output on changeover contact	Option DS215S-120/G : output on changeover contact
Spare unit		DSM215-400		DSM215-230/G	DSM215-120	DSM215-120/G
Mounting		Symmetrical rail 35 mm (EN60715)				
Operating temperature		-40/+85°C				
Protection rating		IP20				
Housing material		Thermoplastic UL94-V0				
Standards compliance		IEC 61643-11 / EN 61643-11 / UL1449 ed.4				
Certification		UL / CSA / EAC				
Part number		451401	451701	451721	451601	451621

**: Rating in compliance with nominal discharge current. In order to increase service continuity, higher rating can be used. For further information, please consult product instructions.
*Note: MC = Common mode (L/PE or N/PE)/ MD = Differential mode (L/N)

3-phase Type 2 (or 3) Surge Protector
DS415 series

CITEL

Imax 15 kA

DS415-400

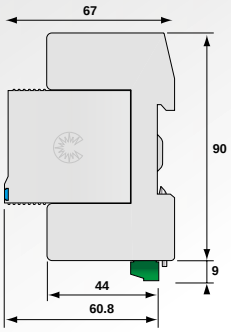

DS415S-xxx

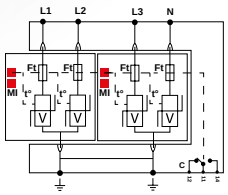

DS415S-xxx/G

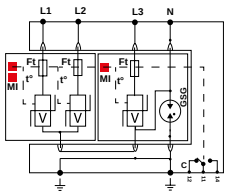

V : High energy varistor
Ft : Thermal fuse
C : Remote signaling contact
t° : Thermal disconnection system
GSG: Specific GDT
MI : Disconnection indicator

- **Compact 3-phase SPD**
- **In : 5 kA**
- **Imax : 15 kA**
- **Common/Differential mode**
- **Pluggable module**
- **Remote signaling contact (option)**
- **IEC 61643-11, EN 61643-11 and UL 1449 ed.4 compliance**

DS415 S-xxx/G

- « » = CT1 configuration (common mode)
- «G» = CT2 (common and differential mode)
- Operating voltage
- «S» = Remote signal option
- Imax 15 kA
- 4 protected poles

Characteristics

CITEL Model		DS415-400	DS415-230	DS415-230/G	DS415-120	DS415-120/G
Description		Compact 3-phase+N Type 2 surge protector - 230/400 V - Pluggable			Compact 3-phase+N Type 2 surge protector - 120 V - Pluggable	
Network		230/400 V 3-phase	230/400 V 3-phase	230/400 V 3-phase	120/208 V 3-phase	120/208 V 3-phase
Connection mode		L/N and N/PE	L/N and N/PE	L/N and N/PE	L/N and N/PE	L/N and N/PE
AC system		IT	TN	TT-TN	TN	TT-TN
Max. AC operating voltage	Uc	440 Vac	255 Vac	255 Vac	150 Vac	150 Vac
Temporary Over Voltage (TOV) *Charasteristics - 5 sec.*	UT	580 Vac withstand	335 Vac withstand	335 Vac withstand	180 Vac withstand	180 Vac withstand
Temporary Over Voltage (TOV) *Charasteristics - 120 mn*	UT	770 Vac disconnection	440 Vac disconnection	440 Vac disconnection	230 Vac disconnection	230 Vac disconnection
Temporary Over Voltage N/PE (TOV HT)	UT	-	-	1200 V/300A/200 ms withstand	-	1200 V/300A/200 ms withstand
Residual current *- Leakage current at Uc*	Ipe	< 1 mA	< 1 mA	None	< 1 mA	None
Follow current	If	None	None	None	None	None
Nominal discharge current *- 15 x 8/20 µs impulses*	In	5 kA	5 kA	5 kA	5 kA	5 kA
Max. discharge current *-max. withstand @ 8/20 µs by pole*	Imax	15 kA	15 kA	15 kA	15 kA	15 kA
Withstand on overvoltages IEEE C62.41.1	Uoc	10 kV	10 kV	10 kV	10 kV	10 kV
Protection level CM/DM* *@In (8/20µs) and @ 6kV (1.2/50µs)*	Up	1.3 kV	0.9 kV	1.5/0.9 kV	0.6 kV	1.5/0.6 kV
Admissible short-circuit current	Isccr	10000 A	10000 A	10000 A	10000 A	10000 A
Associated disconnectors						
Thermal disconnector		internal				
Fuses		Fuses type gG - 20A**				
Installation ground fault breaker		Type "S" or delayed				
Mechnical characteristics						
Dimensions		see diagram				
Connection to Network		by screw terminals: 1.5-10mm² (L/N) or 2.5-25mm² (PE)				
Disconnection indicator		4 mechanical indicators	4 mechanical indicators	3 mechanical indicators	4 mechanical indicators	3 mechanical indicators
Remote signaling of disconnection		Option DS415S-400 : output on changeover contact	Option DS415S-230 : output on changeover contact	Option DS415S-230/G : output on changeover contact	Option DS415S-120 : output on changeover contact	Option DS415S-120/G : output on changeover contact
Spare unit		DSM415-400	DSM415-230	DSM415-230/G + DSM415-230/GPE	DSM415-120	DSM415-120/G + DSM415-120/GPE
Mounting		Symmetrical rail 35 mm (EN60715)				
Operating temperature		-40/+85°C				
Protection rating		IP20				
Housing material		Thermoplastic UL94-V0				
Standards compliance		IEC 61643-11 / EN 61643-11 / UL1449 ed.4				
Certification		EAC				
Part number		451402	451702	451722	451602	451622

**: Rating in compliance with nominal discharge current. In order to increase service continuity, higher rating can be used. For further information, please consult product instructions.
*Note: MC = Common mode (L/PE or N/PE)/ MD = Differential mode (L/N)

CE EAC

1-phase Type 2 (or 3) Surge Protector
DS98 series

CITEL

Imax 3-10 kA

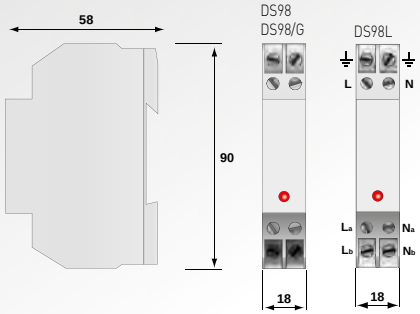

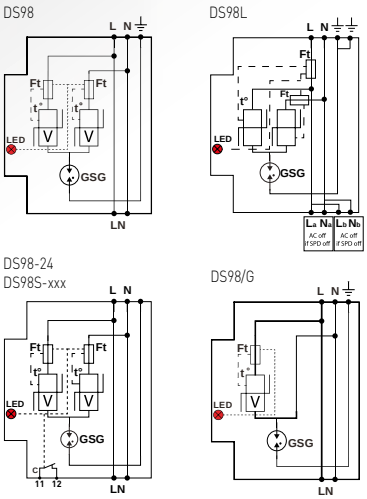

V: MOV
GSG: Specific GDT
F : Thermal fuse
t°: Thermal disconnection mechanism
LED: Disconnector indicator
C: Remote signaling contact

- **Cost effective Single phase Surge Protector**
- **Type 2 (or 3) monobloc**
- **In: 5 kA**
- **Imax: 10 kA**
- **Common/Differential mode**
- **Failsafe operation : AC disconnection or SPD disconnection**
- **Remote signaling in option**
- **IEC 61643-11, EN 61643-11 and UL1449 ed.4 compliance**

Characteristics

CITEL Model		DS98-230/G	DS98-400	DS98L-400	DS98-120	DS98L-120	DS98-24
Description		Compact single-phase type 2 (or 3) surge protector - 230 V - Monobloc			Compact single-phase type 2 (or 3) surge protector - 120 V - Monobloc		Compact single-phase type 2 (or 3) SPD - Monobloc
Network		230 V single phase	230 V single phase	230 V single phase	120 V single phase	120 V single phase	24 V single phase
Connection mode		L/N/PE	L/N/PE	L/N/PE	L/N/PE	L/N/PE	-
AC system		TT-TN	TN	TN	TN	TN	-
Max. AC operating voltage	Uc	275 Vac	275 Vac	275 Vac	150 Vac	150 Vac	28 Vac
Temporary Over Voltage (TOV) Charasteristics - *5 sec.*	UT	335 Vac withstand	335 Vac withstand	335 Vac withstand	180 Vac withstand	180 Vac withstand	-
Temporary Over Voltage (TOV) Charasteristics - *120mn*	UT	440 Vac disconnection	440 Vac disconnection	440 Vac disconnection	230 Vac disconnection	230 Vac disconnection	-
Temporary Over Voltage N/PE (TOV HT)	UT	1200V/300A/200 ms withstand	-	-	-	-	-
Residual current - *Leakage current at Uc*	Ipe	None	None	None	None	None	None
Max. Load current	IL	16 A	16 A	16 A	16 A	16 A	16 A
Follow current	If	None	None	None	None	None	None
Nominal discharge current - *15 x 8/20 µs impulses*	In	5 kA	5 kA	5 kA	5 kA	5 kA	1.5 kA
Max. discharge current - *max. withstand @ 8/20 µs by pole*	Imax	10 kA	10 kA	10 kA	10 kA	10 kA	3 kA
Withstand on Combination waveform - *Class III test*	Uoc	10 kV	10 kV	10 kV	10 kV	10 kV	3 kV
Protection level CM/DM* *@In (8/20µs) and @ 6kV (1.2/50µs)*	Up	1.5 kV/ 1.5 kV	1.5 kV/ 1 kV	1.5 kV/ 1 kV	0.7 kV/ 0.7 kV	0.7 kV/ 0.7 kV	650 V/220 V
Admissible short-circuit current	Isccr	10000 A	10000 A	10000 A	10000 A	10000 A	10000 A
Associated disconnectors							
Thermal disconnector		internal					
Fuses		Fuses type gG - 20A**					
Installation ground fault breaker		Type «S» or delayed					
Mechnical characteristics							
Dimensions		see diagram					
Connection to Network		by screw terminals: 2.5 mm² max.					
Failsafe behavior		Disconnection SPD	Disconnection SPD	AC network cutt-off	Disconnection SPD	AC network cutt-off	Disconnection SPD - Remote signaling
Disconnection indicator		Red light on					Red light on
Remote signaling of disconnection		option DS98S-230/G	option DS98S-400	No	option DS98S-120	No	Contact NF open***
Mounting		Symmetrical rail 35 mm (EN60715)					
Operating temperature		-40/+85°C					
Protection rating		IP20					
Housing material		Thermoplastic UL94-V0					
Standards compliance		IEC 61643-11 / EN 61643-11 / UL1449 ed.4					
Certification		EAC					
Part number		350923	3509011	3519011	3509012	3519012	350904

*Note: MC = Common mode (L/PE or N/PE)/ MD = Differential mode (L/N)
**Note: Rating in compliance with nominal discharge current. In order to increase service continuity, higher rating can be used. For further information, please consult product instructions.
***Note: Closed contact (NF)

Type 2 AC Surge Protector and RFI Filtering
DS40HFs series

CITEL

Imax 40 kA

DS41HFS-120

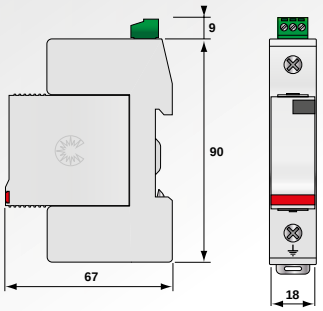

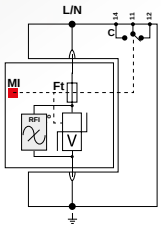

V : MOV
GDT : Gas tube
Ft : Thermal fuse
t° : Thermal disconnection mechanism
C : Remote signaling contac
RFI: RFI filtering

- **Type 2 AC surge protector**
- **Integrated RFI Filtering**
- **In: 20 kA**
- **Imax: 40 kA**
- **Pluggable module**
- **Remote signaling**
- **IEC 61643-11, EN 61643-11 and UL1449 ed.4 compliance**

Characteristics

CITEL Model		**DS41HFS-230**	**DS41HFS-120**
Description		Type 2 AC surge protector + RFI filtering	
Network		230/400 V	120/208 V
Connection mode		L/N or N/PE	L/N or N/PE
Max. AC operating voltage	Uc	255 Vac	150 Vac
Temporary Over Voltage (TOV) Charasteristics - 5 sec.	UT	335 Vac withstand	180 Vac withstand
Temporary Over Voltage (TOV) Charasteristics - 120 mn	UT	440 Vac disconnection	230 Vac disconnection
Residual current *- Leakage current at Uc*	Ipe	< 1 mA	< 1 mA
Follow current	If	None	None
Nominal discharge current *- 15 x 8/20 µs impulses*	In	20 kA	20 kA
Max. discharge current *-max. withstand (à 8/20 µs by pole*	Imax	40 kA	40 kA
Protection level	Up	1.25 kV	0.9 kV
Admissible short-circuit current	Isccr	25000 A	25000 A
RFI Filtering		0.1-30 Mhz	0.1-30 Mhz
Max. shunt capacitance		0,22 µF	0,22 µF
Associated disconnectors			
Thermal disconnector		internal	
Fuses		Fuses type gG - 50 A	
Installation ground fault breaker		Type "S" or delayed	
Mechnical characteristics			
Dimensions		see diagram	
Connection to Network		by screw terminals: 2.5-25 mm²	
Disconnection indicator		1 mechanical indicator	
Remote signaling of disconnection		output on changeover contact	
Spare unit		DSM40HF-230	DSM40HF-120
Mounting		Symmetrical rail 35 mm (EN60715)	
Operating temperature		-40/+85°C	
Protection rating		IP20	
Housing material		Thermoplastic UL94-V0	
Standards compliance		IEC 61643-11 / EN 61643-11 / UL1449 ed.4	
Certification		UL / CSA / EAC	UL / CSA / EAC
Part number		461590	461690

Type 2 + 3 Single-phase Surge Protector and RFI Filtering
DS-HF series

Imax 10 kA

DS-HF

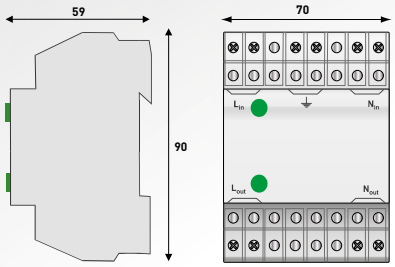

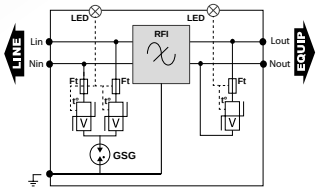

V: Varistor
GSG: Specific GDT
Ft: Thermal fuse
t°: Thermal disconnection system
LED : Operating indicator

- **Surge protector with RFI filtering**
- **In : 3kA**
- **Imax : 10 kA**
- **Common and differential mode protection**
- **Low protection level**
- **Operating/disconnection indicators**
- **IEC 61643-11, EN 61643-11 and UL1449 ed.4 compliance**

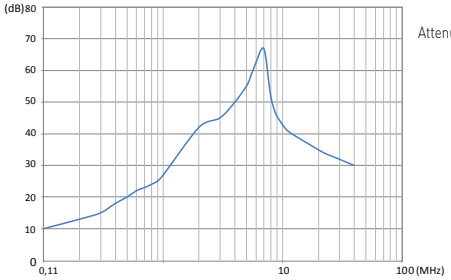

Attenuation curve

Characteristics

CITEL Model		DS-HF	DS-HF-120
Description		Type 2+3 single-phase surge protector and filter	
Network		230 V single phase	120 V single phase
Connection mode		L/N/PE	L/N/PE
AC system		TT-TN	TT-TN
Max. AC operating voltage	Uc	255 Vac	150 Vac
Max. Load current	IL	16 A	16 A
Temporary Over Voltage (TOV) Charasteristics - 5 sec.	UT	335 Vac withstand	180 Vac withstand
Temporary Over Voltage (TOV) Charasteristics - 120 mn	UT	440 Vac disconnection	230 Vac disconnection
Residual current - *Leakage current at Uc*	Ipe	< 1 mA	< 1 mA
Follow current	If	None	None
Nominal discharge current - *15 x 8/20 µs impulses*	In	3 kA	3 kA
Max. discharge current -*max. withstand ß 8/20 µs by pole*	Imax	10 kA	10 kA
Withstand on Combination waveform - *Class III test*	Uoc	10 kV	10 kV
Protection level	Up	1 kV/ 0.8 kV	0.6 kV/0.5 kV
Admissible short-circuit current	Isccr	10000 A	10000 A
RFI Filtering		0.1 - 30 MHz	0.1 - 30 MHz
Associated disconnectors			
Thermal disconnector		internal	
Fuses		Fuses type gG - 20 A max. (if necessary)	
Installation ground fault breaker		Type "S" or delayed	
Mechnical characteristics			
Dimensions		see diagram	
Connection to Network		by screw terminals: 0.75 - 4 mm²	
Disconnection indicator		Green led(s) off	
Remote signaling of disconnection		none	
Mounting		Symmetrical rail 35 mm (EN60715)	
Operating temperature		-40/+85°C	
Protection rating		IP20	
Housing material		Thermoplastic UL94-V0	
Standards compliance		IEC 61643-11 / EN 61643-11 / UL1449 ed.4	
Certification		EAC	
Part number		77945	77948

48Vdc power Surge Protector

DS252C-48DC/G

DS250E-48DC

DS72R-48DC

DS42S-48DC

DS230-48DC

DS210-48DC

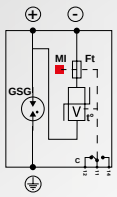

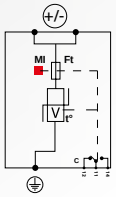

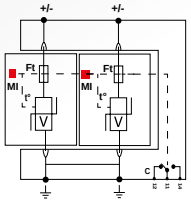

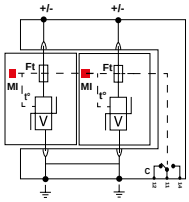

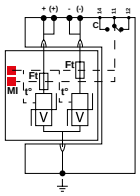

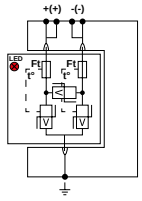

- **Surge protector for 48Vdc supplies**
- **Type 1 and Type 2**
- **Imax up to 70 kA**
- **Iimp up to 25 kA/pole**
- **Remote signaling in option**
- **EN 61643-11, CEI 61643-11 and UL1449 ed.4 compliance**

Characteristics

CITEL Model		DS252C-48DC/G	DS250E-48DC	DS72R-48DC	DS42S-48DC	DS41S-48DC	DS230-48DC	DS210-48DC
Description		1-pole Type 1 and Type 2 SPD for 48 Vdc	1-pole Type 1 and Type 2 SPD for 48 Vdc	2-pole Type 1 and Type 2 SPD for 48 Vdc	2-Pole 48 Vdc surge protector	1-Pole 48 Vdc surge protector	DC power surge protector - 48 Vdc	DC power surge protector - 48 Vdc
Network		48 Vdc	48 Vdc	48 Vdc	48 Vdc	48 Vdc	48 Vdc	48 Vdc
Connection mode		+/- and +/PE	+/PE or -/PE	+/PE and -/PE	+/PE and -/PE	+/PE or -/PE	+/-/PE	+/-/PE
Protection mode(s)		CM/DM	CM	CM	CM	CM	CM	CM/DM
Max. PV operating voltage	Uc-dc	75 Vdc	75 Vdc	65 Vdc	65 Vdc	65 Vdc	65 Vdc	56 Vdc
Residual current *- Leakage current at Uc*	Ipe	without	< 0.1 mA	< 0.1 mA	< 0.1 mA	< 0.1 mA	< 0.1 mA	< 0.1 mA
Nominal discharge current *- 15 x 8/20 µs impulses*	In	25 kA	25 kA	30 kA	15 kA	15 kA	15 kA	1 kA
Max. discharge current *-max. withstand @ 8/20 µs by pole*	Imax	70 kA	70 kA	70 kA	30 kA	30 kA	20 kA	2 kA
Impulse current by pole *- max. withstand 10/350µs*	Iimp	25 kA	25 kA	7 kA	4 kA	4 kA	-	-
Total lightning current *- max. total withstand @ 8/20 µs*	Itotal	50 kA	-	14 kA	8 kA	-	-	-
Max. DC operating voltage	Up	1.5/0.5 kV	0.5 kV	300 V	300 V	300 V	300 V	180 V
Associated disconnectors								
Thermal disconnector		internal						
Fuses (if required)		Fuse type gG - 315 A	Fuse type gG - 315 A	Fuses type gG - 100 A	Fuses type gG - 50 A	Fuses type gG - 50 A	Fuses type gG - 50 A	Fuses type gG- 10 A
Mechnical characteristics								
Dimensions		see diagram						
Connection to Network		by screw : 6-35 mm² / by bus		by screw 4-25 mm²			by screw terminals: 1.5-10mm² (actives wires) and 2.5-25mm² (ground)	
Disconnection indicator		1 mechanical indicator	1 mechanical indicator	2 mechanical indicators	2 mechanical indicators	1 mechanical indicator	2 mechanical indicators	Green led off
Remote signaling of disconnection		output on changeover contact	output on changeover contact	DS72RS-48DC option : output on changeo-ver contact	output on changeo-ver contact	output on changeover contact	Option DS230S-48DC : output on chan-geover contact	-
Mounting		Symmetrical rail 35 mm (EN60715)						
Spare unit		-	-	DSM70R-48DC	DSM40-48DC	DSM40-48DC	DSM230-48DC	DSM210-48DC
Operating temperature		-40/+85°C						
Protection rating		IP20						
Housing material		Thermoplastic UL94-V0						
Standards compliance		IEC 61643-11 / EN 61643-11 / UL1449 ed.4						
Part number		3415	-	492101	462121	332121	390401	440401

DC power surge protector
DS2x0-xxDC series

CITEL

Imax 20-40 kA

DS230-48DC

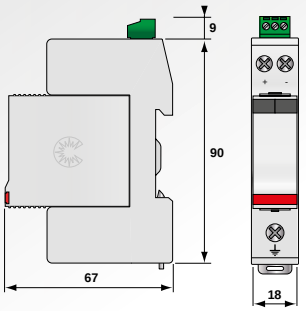

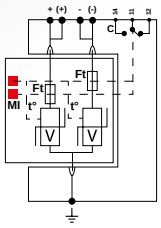

C: Remote signalling contact
V: Varistor
Ft: Thermal fuse
t°: Thermal disconnection system
MI: Disconnection indicators

- **From 12 to 350 Vdc**
- **Very low Up protection level**
- **Compact design**
- **Imax: 20 to 40 kA**
- **Pluggable module**
- **Remote signaling (option)**

DS2xx S-xxxDC

- DC operating voltage
- Remote signal option
- Maximal discharge current

Characteristics

CITEL Model		DS220-12DC	DS220-24DC	DS230-48DC	DS240-75DC	DS240-95DC	DS240-110DC	DS240-130DC	DS240-220DC	DS240-280DC	DS240-350DC
Description		DC or PV power surge protector									
Network		12 Vdc	24 Vdc	48 Vdc	75 Vdc	95 Vdc	110 Vdc	130 Vdc	220 Vdc	280 Vdc	350 Vdc
Connection mode		+/-/PE	+/-/PE	+/-/PE	+/-/PE	+/-/PE	+/-/PE	+/-/PE	+/-/PE	+/-/PE	+/-/PE
Protection mode(s)		CM	CM	CM	CM	CM	CM	CM	CM	CM	CM
Max. DC operating voltage	Uc	24 Vdc	38 Vdc	65 Vdc	100 Vdc	125 Vdc	150 Vdc	180 Vdc	275 Vdc	350 Vdc	460 Vdc
Max. AC operating voltage	Uc	20 Vac	30 Vac	50 Vac	75 Vac	95 Vac	115 Vac	150 Vac	210 Vac	275 Vac	350 Vac
Residual current *- Leakage current at Uc*	Ipe	< 0.1 mA	< 0.1 mA	< 0.1 mA	< 0.1 mA	< 0.1 mA	< 0.1 mA	< 0.1 mA	< 0.1 mA	< 0.1 mA	< 0.1 mA
Max. Load current *(if connection serie)*	IL	20 A	20 A	20 A	20 A	20 A	20 A	20 A	20 A	20 A	20 A
Nominal discharge current *- 15 x 8/20 µs impulses*	In	10 kA	10 kA	15 kA	20 kA	20 kA	20 kA	20 kA	20 kA	20 kA	20 kA
Max. discharge current *-max. withstand @ 8/20 µs by pole*	Imax	20 kA	20 kA	20 kA	40 kA	40 kA	40 kA	40 kA	40 kA	40 kA	40 kA
CM Protection level @ In	Up	250 V	250 V	300 V	390 V	450 V	500 V	620 V	900 V	1200 V	1400 V
Associated disconnectors											
Thermal disconnector		internal									
Fuses (if required)		Fuses type gG - 20 A	Fuses type gG - 20 A	Fuses type gG - 50 A	Fuses type gG - 50 A	Fuses type gG - 50 A	Fuses type gG - 50 A	Fuses type gG - 50 A	Fuses type gG - 50 A	Fuses type gG - 50 A	Fuses type gG - 50 A
Mechnical characteristics											
Dimensions		see diagram									
Connection to Network		by screw terminals: 1.5-10mm² (actives wires) and 2.5-25mm² (ground)									
Disconnection indicator		2 mechanical indicators									
Remote signaling of disconnection		Option DS220S-12DC : output on changeover contact	Option DS220S-24DC : output on changeover contact	Option DS230S-48DC : output on changeover contact	Option DS240S-75DC : output on changeover contact	Option DS240S-95DC : output on changeover contact	Option DS240S-110DC : output on changeover contact	Option DS240S-130DC : output on changeover contact	Option DS240S-220DC : output on changeover contact	Option DS240S-280DC : output on changeover contact	Option DS240S-350DC : output on changeover contact
Spare unit		DSM220-12DC	DSM220-24DC	DSM230-48DC	DSM240-75DC	DSM240-95DC	DSM240-110DC	DSM240-130DC	DSM240-220DC	DSM240-280DC	DSM240-350DC
Mounting		Symmetrical rail 35 mm (EN60715)									
Operating temperature		-40/+85°C									
Protection rating		IP20									
Housing material		Thermoplastic UL94-V0									
Standards compliance		IEC 61643-11 / EN 61643-11 / UL1449 ed.4/EN 50539-11									
Part number		390101	390501	390401	310601	310301	310701	310801	310201	310501	310901

DC power surge protector
DS210-xxDC series

CITEL

Imax 2-6 kA

DS210-24DC

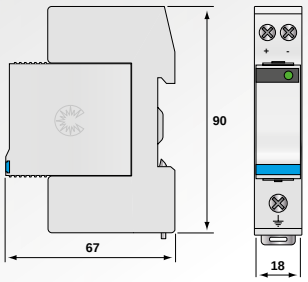

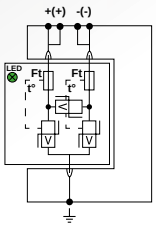

V: Varistor
Ft: Thermal fuse
t°: Thermal disconnection system
LED : Disconnection indicator

- **Surge protector for DC or PV supplies**
- **From 12 to 130V**
- **Discharge currents : Imax : 2 to 6 kA**
- **Operating indicator**
- **Pluggable module**
- **EN 61643-11, CEI 61643-11 and UL1449 ed.4 compliance**

DS210-xxxDC

Nominal DC voltage

Characteristics

CITEL Model		DS210-12DC	DS210-24DC	DS210-48DC	DS210-75DC	DS210-95DC	DS210-110DC	DS210-130DC
Description		DC or PV power surge protector						
Network		12 Vdc	24 Vdc	48 Vdc	75 Vdc	95 Vdc	110 Vdc	130 Vdc
Connection mode		+/-/PE	+/-/PE	+/-/PE	+/-/PE	+/-/PE	+/-/PE	+/-/PE
Protection mode(s)		CM/DM	CM/DM	CM/DM	CM/DM	CM/DM	CM/DM	CM/DM
Max. DC operating voltage	Uc	15 Vdc	30 Vdc	56 Vdc	85 Vdc	100 Vdc	125 vdc	150 Vdc
Max. AC operating voltage	Uc	10 Vac	15 Vac	40 Vac	60 Vac	75 Vac	95 Vac	115 Vac
Residual current *- Leakage current at Uc*	Ipe	< 0.1 mA	< 0.1 mA	< 0.1 mA	< 0.1 mA	< 0.1 mA	< 0.1 mA	< 0.1 mA
Max. Load current *(if connection serie)*	IL	20 A	20 A	20 A	20 A	20 A	20 A	20 A
Nominal discharge current *- 15 x 8/20 µs impulses*	In	1 kA	1 kA	2 kA	2 kA	2 kA	2 kA	2 kA
Max. discharge current *-max. withstand @ 8/20 µs by pole*	Imax	2 kA	2 kA	6 kA	6 kA	6 kA	6 kA	6 kA
CM Protection level @ In	Up	85 V	105 V	180 V	250 V	300 V	350 V	400 V
Associated disconnectors								
Thermal disconnector		internal						
Fuses (if needed)		Fuses type gG- 10 A						
Mechnical characteristics								
Dimensions		see diagram						
Connection to Network		by screw terminals: 1.5-10mm² (actives wires) and 2.5-25mm² (ground)						
Disconnection indicator		Green led off						
Spare unit		DSM210-12DC	DSM210-24DC	DSM210-48DC	DSM210-75DC	DSM210-95DC	DSM210-110DC	DSM210-130DC
Mounting		Symmetrical rail 35 mm (EN60715)						
Operating temperature		-40/+85°C						
Protection rating		IP20						
Housing material		Thermoplastic UL94-V0						
Standards compliance		IEC 61643-11 / EN 61643-11 / UL1449 ed.4						
Part number		440201	440301	440401	440601	441001	440901	440602

CE EAC

Accessories for AC Surge Protectors

Coordination inductors
DSH series

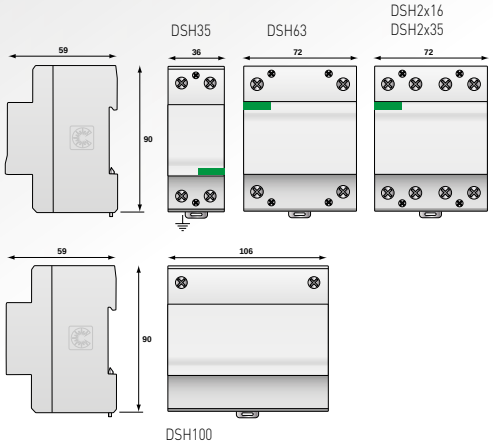

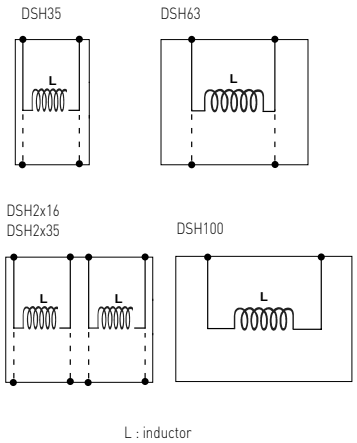

L : inductor

- **Coordination inductors for Surge Protectors**
- **For use with the DS series**
- **35A, 63A, 100A versions**
- **2x16A and 2x35A double inductor versions**
- **See «coordination» page 19**

Characteristics

CITEL model		DSH100	DSH63	DSH35	DSH2X35	DSH2x16
Description		Coordination inductor				
Max. operating voltage	Uc	500 Vac	500 Vac	500 Vac	500 Vac	500 Vac
Max. line current	IL	100 A	63 A	35 A	2 x 35 A	2 x 16 A
Line inductance		15 µH	15 µH	15 µH	2 x 15 µH	2 x 15 µH
Mechanical characteristics						
Wiring		1 DSH in serie on each active wire			1 DSH in series on 2 active wires	
Dimensions		see diagram				
Connection		screw terminals : 6-35 mm² (DSH2x16, DSH2x35, DSH35, DSH63) screw terminals : 4-50 mm² (DSH100)				
Mounting		Symmetrical DIN rail 35 mm (EN60715)				
Operating temperature		-40/+85°C				
Protection class		IP20				
Housing material		Thermoplastic UL94-V0				
Part number		465100	360807	360806	360808	2960

CE

Fuses for protection of AC SPD

- **Fuses adapted to the protection of AC surge protectors**
- **For Type 1, Type 2 and Type 3 SPDs**
- **Fusion signaling**
- **Brackets with remote signaling**

Fuses associated with surge protector		
Calibre	**Dimensions**	**Fuses Part number**
500 A gG	NH2	**395390**
315 A gG	NH2	**395270**
125 A gG	Cyl. 22x58 mm	**6062 0125**
50 A gG	Cyl. 22x58 mm	**6062 0050**
20 A gG	Cyl. 22x58 mm	**6062 0020**

Fuse holder NH2		
Number of poles	**with remote signaling contact**	**without remote signaling contact**
1 pole	356400	354400

Cylindrical fuse holder 22x58		
Number of poles	**with remote signaling contact**	**without remote signaling contact**
1 pole	5603 5011	5603 5001

Screw terminal for «V» connection
DSDT16

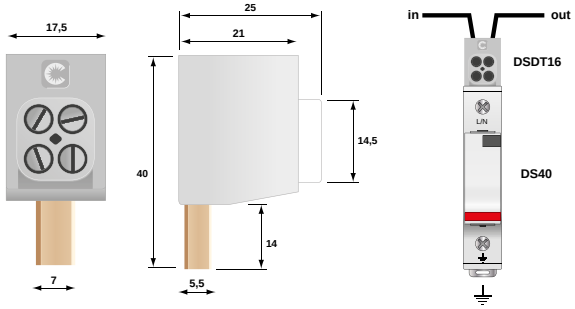

- **«V» connection screw terminal for SPD**
- **Improved connection for better efficiency**
- **2 x 35 mm² wire connection**
- **Adapted to DS surge protectors**

CITEL model	DSDT16
Description	Screw terminal for «V» connection
Mini-max. cross section	2.5 - 35 mm² (13-5 AWG)
Torque	2-2,2 Nm (18-22 lb-in)
Insulation material	Polycarbonate UL94V0
Metal part	Brass
Mounting	on DS range terminal
Part number	400102

Accessories for AC Surge Protectors

Connection bus for Surge Protectors

- **Range of connection buses for surge protectors**
- **Connection of unipolar surge protector**
- **several configurations adapted to surge protector**

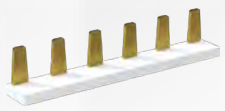

Busbar P 6P 18

CITEL model	Busbar P *P 18			
Pas	Straight bus 18 mm			
Output	flat contact			
Insulation	over-moulded			
Contact material	Brass			
Mounting	on surge protector type DS40			
Number of poles*	2	3	4	6
Model	Busbar P 2P 18	Busbar P 3P 18	Busbar P 4P 18	Busbar P 6P 18
Part number	400105	400106	400107	400108

Busbar U 4P 18

CITEL model	Busbar U *P 18		
Pas	Straight bus 18 mm		
Output	U contact		
Insulation	Over-moulded		
Contact material	Brass		
Mounting	on surge protector type DS40		
Number of poles*	2	3	4
Model	Busbar U 2P 18	Busbar U 3P 18	Busbar U 4P 18
Part number	4001014	4001012	4001013

Busbar U 3P 35

CITEL model	Busbar U *P 35		
Pas	Straight bus 35 mm		
Output	U contact		
Insulation	insulating hood		
Contact material	Brass		
Mounting	on surge protector type DS250		
Number of poles*	2	3	4
Model	Busbar U 2P 35	Busbar U 3P 35	Busbar U 4P 35
Part number	39302	39303	39304

Busbar U 2P 89

CITEL model	Busbar U *P 89	
Pas	Straight bus 89 mm	
Output	U contact	
Insulation	insulating hood	
Contact material	Brass	
Mounting	on surge protector type DS500	
Number of poles*	2	3
Model	Busbar U 2P 89	Busbar U 3P 89
Part number	300198	300193

Busbar U 3+1P N/R 35

CITEL model	Busbar U *+1P N/R 35	
Pas	Bus with Neutral at the top right, 35 mm	
Output	U contact	
Insulation	insulating hood	
Contact material	Brass	
Mounting	for 1+1 or 3+1 assembly of DS250 type surge protector	
Number of poles*	1+1	1+3
Model	Busbar U 1+1P N/R 35	Busbar U 3+1P N/R 35
Part number	39312	39305

CITEL

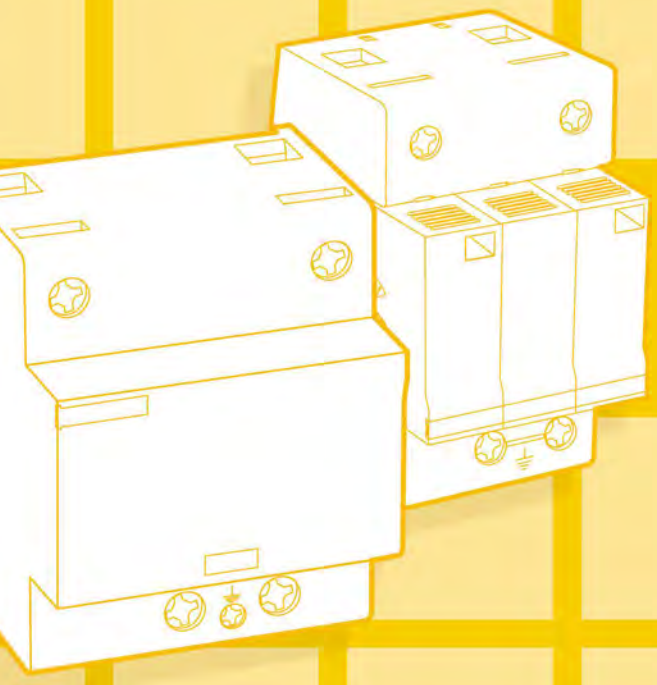

PHOTOVOLTAIC

Surge Protectors

Surge Protectors for Photovoltaic systems

Most photovoltaic module manufacturers guarantee their materials for 20 years or more.The ROI of photovoltaic generation facilities connected to the low voltage network is therefore calculated over this long period of time. But these systems are often highly exposed to lightning and power surges, which can greatly reduce the required operating time. Implementation of appropriate protection solutions is strongly recommended.

Several points must be considered to analyze the risk «Lightning and Power Surges»:

- Due to the exposed nature of the PV array, the threat of «lightning» is more common.
- The risk is multiple: direct effect (lightning strike on the panels) and indirect (surge on cells, solar chargers / inverters), on other lines (data).
- The operating loss must be taken into account, especially at sites of high power capacity.
- When the PV system is located on industrial sites, the risk of switching overvoltages must also be taken into account.
- The level of risk is directly related to the lightning density and exposure of local lines

Protection of PV installation

The photovoltaic grid-connected low voltage power lines may be subject to overvoltages on different networks:

- ***AC network***: surge protectors are necessary, and in most cases, mandatory on the AC output of the PV inverter which is connected back to the AC power grid.

- ***DC network***: surge protectors are required or mandatory on the input of the PV inverter or the input of the PV modules.

- ***Communication network:*** if the PV inverter is connected to signal lines (probes, sensors, monitoring) then surge protectors are highly recommended on these networks.

AC surge protectors for PV installation

Depending on the type of networks, the presence of lightning rod or primary surge protectors existing, CITEL offers a complete range of solutions to protect the AC part of the PV system.

Installations with lightning rods

A Type 1 surge protector, specifically dimensioned to handle direct lightning current is required at the service entrance of the installation (main switchboard). Surge protectors like the DS130R provide a high energy surge capacity in a compact size and are easily serviced with pluggable modules.

Standard installation

In the absence of lightning rod, the implementation of a type 2 SPD is generally preferred,but, in some cases, it is compulsory depending on the level of lightning in the area (Ng> 2.5). The DS40 type 2 arrester range offers a modular solution adapted to these applications. For medium and small size facilities with limited space available, the DS240/DS440 provides a high surge capacity in a reduced footprint.

Input protection of PV inverter

CLC/TS 50539-12 guide requires the implementation of an additional SPD on the AC input of the PV inverter, if it is more than 10 m from the primary surge protector. The DS215/DS415 surge protectors provide this protection for these applications and can be installed either directly into the distribution panel or in a dedicated, standalone enclosure solution.

Surge protectors for datalines

The PV system can be interconnected to various datalines networks including probes, sensors, and monitoring equipment. In these cases, the implementation of suitable surge protectors is highly recommended: The DLA range performs this function and is available for any type of telecom or data line connections

DC surge protectors for PV installation

The DC input of the PV inverter has to be protected according to the recommendation of the CLC/TS 50539-12 Guide. CITEL has designed a complete range of Type 1 and Type 2 surge protectors for these applications that are compliant with the EN 50539-11 product standard.

Type 1 surge protectors

When the installation is equipped with lightning rods or for open free PV fields (see CLC/TS 50539-12), it is mandatory to install SPD dimensioned for a direct lightning impulse (10/350µs). In these cases, CITEL has developed a range of high energy Type 1 surge protectors:

- **DS60VGPV/51 series** : Type 1 SPDs may withstand @10/350µs up to 12.5 kA by pole (Iimp) and 25 kA (Itotal), it incorporates CITEL's exclusive, patented «VG Technology». Comply with EN50539-11 product test.

- **DS50PV/12KT1 and DS50VGPV/12KT1 series** :
  These Type 1 pluggable SPDs have a current total of 12.5 kA (Itotal) and are required when the likely direct current lightning is not maximal .

Type 2 surge protectors

In most installations, the SPD will be necessary or obligatory and will be of type 2. CITEL offers 3 ranges with pluggable module design:

- **DS50PV series** : based on the use of specific varistors, providing a protection in common mode or differential and common mode.

- **DS50PV/51 series** : based on the use of specific varistors, providing a protection in common mode or differential and common mode. Comply with EN50539-11 product test.

- **DS50VGPV/51 series** : This version is based on VG technology, insuring a total absence of leakage current and maximum reliability. Comply with EN50539-11 product test.

Series		*Description*	*Characteristics*	*Page*
DS60VGPV		Type 1+2 surge protector for PV	High energy VG Technology	69
DS50PV/12KT1 DS50VGPV/12KT1		Type 1+2 surge protector	Pluggable	**70**
DS50VGPV		Type 2 surge protector for PV	Pluggable VG Technology	71
DS50PV		Type 2 surge protector for PV	Pluggable	72

Protection of isolated (off-grid) PV systems

The exposure and location of remote sites powered by isolated PV systems not connected to the AC network are at a very high risk of failure due to transient surges.
Unlike the sites connected to the distribution network, PV equipment failure at a remote site will result in a total operating loss: thus, the implementation of appropriate surge protection is strongly recommended.
The selection and installation of surge protectors for off-grid sites will be defined in the UTE C15-712-2 guide.

CITEL surge protectors for remote sites are available in voltages from 12 to 350Vdc.

Surge protection for PV powered off-grid installation

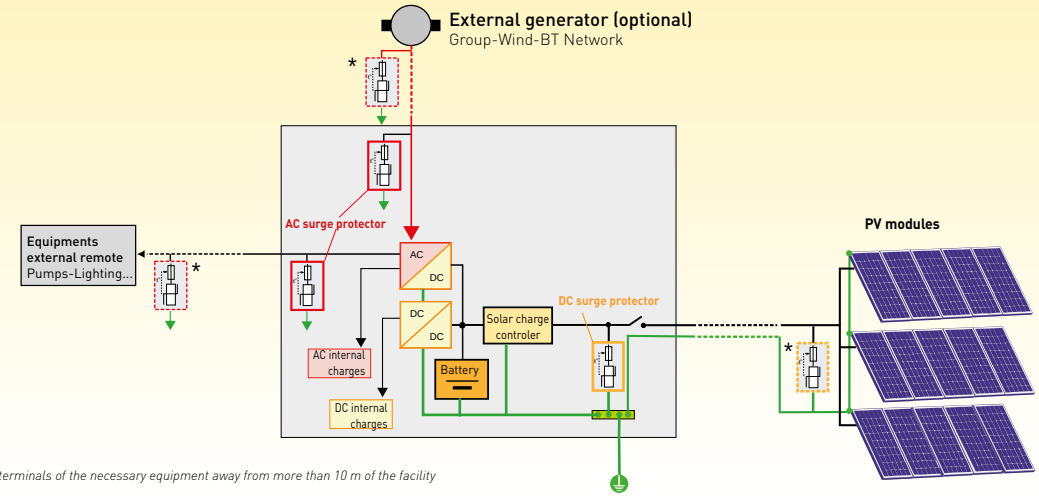

**) surge arrester at the terminals of the necessary equipment away from more than 10 m of the facility*

DS50PV/51, DS50VGPV/51 and DS5VP/12KT1 series

Pluggable module
Disconnection for simplified maintenance.
Standardized marking

Connectors
Significant physical separation screw terminal blocks: ensuring insulation between polarities even for high DC voltages

Status signaling
In case of safety disconnection, the indicator switches to red: module to replace.

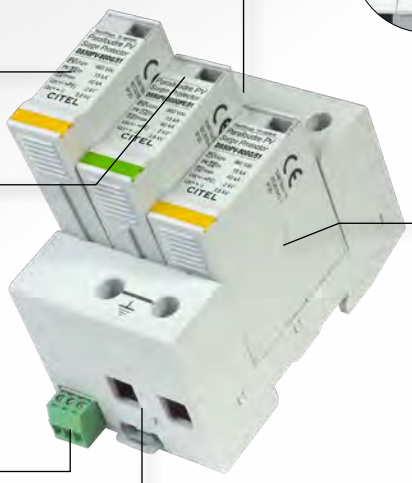

Versions
several diagrams available
DS50PV/51 and DS50VGPV

Remote signalling
Option to remotely monitor the status of the surge protector. Simplified cabling thanks to a single terminal for monitoring all poles.

Earth
Double connector for optimized connection ground network.

DS60VGPV/51 series

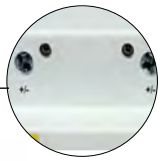

Connectors
Significant physical separation screw terminal blocks: guarantee insulation between polarities even for high DC voltages

VG Technology
Efficiency and reliability maximum

Remote signalling
Standard feature to remotely monitor the status of the surge protector. Simplified cabling thanks to a single terminal for monitoring all poles.

Status signaling
In case of safety disconnection, the indicator switches to red: SPD to replace.

Protection of Photovoltaic installations

Residential Photovoltaic installation

The CLC/TS 50539-12 installation guide gives the relevant information to manage the safe operation of PV installation in case of surge due to lightning. For small power plants (residential and small commercial), AC input (connection to the grid) and DC out should be protected.

The implementation of the SPD may be mandatory for some cases. However, if the reliability and longevity of the PV system are the primary objective then the implementation of surge protectors is always recommended.

Business/Building Photovoltaic installation

Commercial or industrial sites can integrate very large photovoltaic systems into their power generation strategy. These applications are vulnerable to lightning and transient surges which can cause significant downtime and losses. The implementation of SPDs at key locations throughout the facility is necessary to ensure the reliable operation of the plant.

Photovoltaic Power Plant

Photovoltaic power plants have a high risk of lightning strikes due to their large surface area and exposed location. This means expensive, sensitive equipment is vulnerable to lightning strikes resulting in direct replacement costs and operation downtime losses. Thus implementation of SPDs on AC, DC and communication lines are highly recommanded.

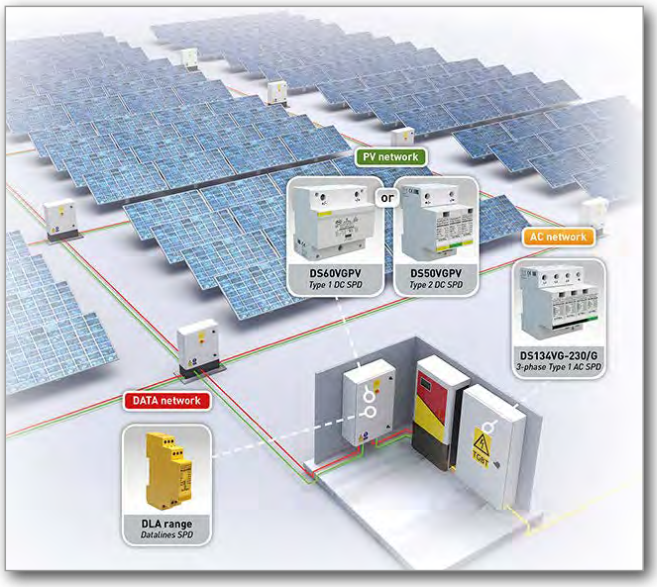

Type 1+2 PV Surge Protector
DS60VGPV/51 series

DS60VGPV-1500G/51

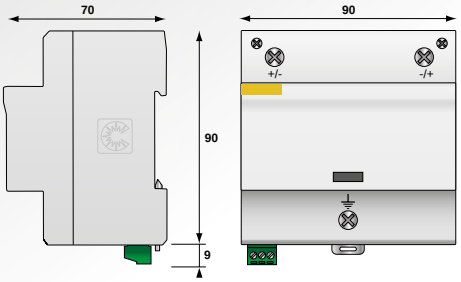

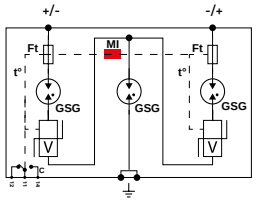

GSG: Specific gas tube
V : High energy MOV
Mi : Disconnection indicator
Ft : Thermal fuse
t° : Thermal disconnection mechanism
C : Contact for remote signal

- **Type 1+2 Surge Protector for Photovoltaic**
- **VG-Technology**
- **No leakage, no operating currents**
- **Improved life expectancy**
- **Impulse currents Iimp/Itotal 12.5 / 25 kA @ 10/350µs**
- **Common and Differential mode protection**
- **Remote Signaling**
- **EN 50539-11 compliance**
- **VDE and OVE approved**

DS60VGPV-xxxG/51

- xxx: Maximum PV voltage
- VG: «VG» = VG Technology

Characteristics

CITEL Model		DS60VGPV-600G/51	DS60VGPV-1000G/51	DS60VGPV-1500G/51
Description		Type 1+2 PV surge protector	Type 1+2 PV surge protector	Type 1+2 PV surge protector
Network	Uocstc	PV network 600 Vdc	PV network 1000 Vdc	PV network 1250 Vdc
Connection mode		+/-/PE	+/-/PE	+/-/PE
Protection mode(s)		CM/DM	CM/DM	CM/DM
Max. PV operating voltage	Ucpv	720 Vdc	1200 Vdc	1500 Vdc
Current withstand short circuit PV	Iscpv	15000 A	15000 A	15000 A
Permanente operating current - *Leakage current at Ucpv*	Icpv	None	None	None
Residual current - *Leakage current at Ucpv*	Ipe	None	None	None
Nominal discharge current - *15 x 8/20 µs impulses*	In	20 kA	20 kA	20 kA
Max. discharge current -*max. withstand @ 8/20 µs by pole*	Imax	40 kA	40 kA	40 kA
Impulse current by pole - *max. withstand 10/350µs*	Iimp	12.5 kA	12.5 kA	12.5 kA
Total lightning current - *max. total withstand @ 10/350 µs*	Itotal	25 kA	25 kA	25 kA
Protection level CM/DM *@In (8/20µs) and @ 6kV (1.2/50µs)*	Up	2.2/2.8 kV	4.7/5.4 kV	4.7/5.4 kV
Associated disconnectors				
Thermal disconnector		internal		
Fuses		without		
Mechnical characteristics				
Dimensions		see diagram		
Connection to Network		screw terminals: 6-35mm²		
Disconnection indicator		1 mechanical indicator		
Remote signaling of disconnection		Output on changeover contact - 250 Vac/0.5 A (AC) - 30 Vdc/3 A (DC)		
Mounting		Symmetrical rail 35 mm (EN60715)		
Operating temperature		-40/+85°C		
Protection rating		IP20		
Housing material		Thermoplastic UL94-V0		
Standards compliance		EN50539-11 / UTE C61740-51		
Certification		EAC	VDE / OVE / EAC	EAC
Part number		3963	3958	3956

*) CM = Common mode (+/PE or -/PE) - DM = Differential mode (+/-)

Type 1+2 PV Surge Protector
D50xxPV-G/12KT1

DS50PV-1000G/12KT1

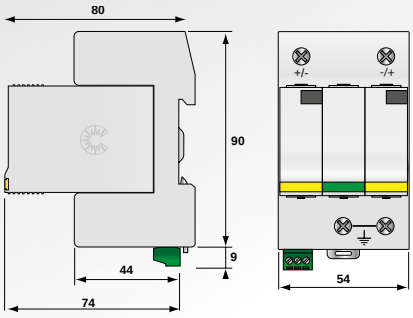

DS50VGPVS-1000G/12KT1

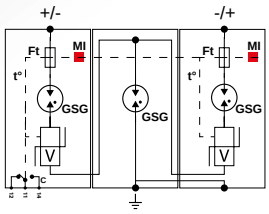

GSG: Gas-filled spark gap
V : High energy MOV
Ft : Thermal fuse
t° : Thermal disconnection mechanism
C : Contact for remote signal
MI : Disconnection indicator

- **Type 1+2 Surge Protector for Photovoltaic**
- **for 1000 and 1250 Vdc PV voltage**
- **Impulse currents Iimp/Itotal : 6.25/12.5 kA @ 10/350µs**
- **Common Mode and Differential protection**
- **Remote Signaling (option)**
- **Plug-in modules**
- **EN 50539-11 compliance**

DS50VGPVS-1000G/12KT1

- PV voltage
- «S» option remote signalling status
- «VG» : VG technology

Characteristics

CITEL Model		DS50VGPV-1000G/12KT1	DS50PV-1000G/12KT1	DS50PV-1500/12KT1
Description		Type 1+2 PV surge protector		
Network	Uocstc	PV network 1000 Vdc	PV network 1000 Vdc	PV network 1250 Vdc
Protection mode(s)		CM/DM	CM/DM	CM/DM
Max. PV operating voltage	Ucpv	1200 Vdc	1200 Vdc	1500 Vdc
Current withstand short circuit PV	Iscpv	15000 A	15000 A	15000 A
Permanente operating current - *Leakage current at Ucpv*	Icpv	None	< 0.1 mA	< 0.1 mA
Residual current - *Leakage current at Ucpv*	Ipe	None	None	< 0.1 mA
Follow current	if	None	None	None
Nominal discharge current - *15 x 8/20 µs impulses*	In	15 kA	15 kA	15 kA
Max. discharge current -*max. withstand @ 8/20 µs by pole*	Imax	40 kA	40 kA	40 kA
Impulse current by pole - *max. withstand 10/350µs*	Iimp	6.25 kA	6.25 kA	6.25 kA
Total lightning current - *max. total withstand @ 10/350 µs*	Itotal	12.5 kA	12.5 kA	12.5 kA
Total Maximal discharge current - *max. total withstand @ 8/20 µs*	Imax total	60 kA	60 kA	60 kA
Protection level CM/DM *@In (8/20µs) and @ 6kV (1.2/50µs)*	Up	2.8/5.1 kV	2.6/4.6 kV	5.3/5.3 kV
Associated disconnectors				
Thermal disconnector		internal		
Fuses		without		
Mechanical characteristics				
Dimensions		see diagram		
Connection to Network		Screw terminals: 2.5-25mm²		
Disconnection indicator		2 mechanical indicators		
Remote signaling of disconnection		Option DS50VGPVS-1000G/12KT1 - output on changeover contact	Option DS50PVS-1000G/12KT1 - output on changeover contact	Option DS50PVS-1500/12KT1 - output on changeover contact
Mounting		Symmetrical rail 35 mm (EN60715)		
Operating temperature		-40/+85°C		
Protection rating		IP20		
Housing material		Thermoplastic UL94-V0		
Standards compliance		EN50539-11		
Part number		-	482383	-

CE

CITEL VG TECHNOLOGY

Type 2 PV Surge Protector
DS50VGPV-G/51 series

DS50VGPV-1500G/51

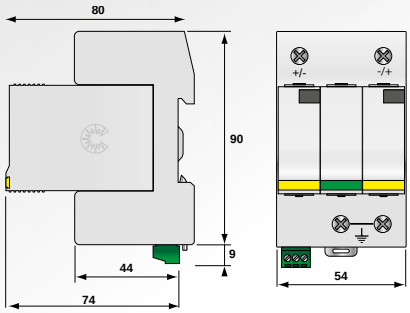

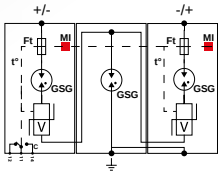

GSG: Specific gas tube
V : High energy MOV
Ft : Thermal fuse
t° : Thermal disconnection mechanism
C : Contact for remote signal
MI: Disconnection indicator

- **Type 2 Surge Protector for Photovoltaic**
- **VG-Technology**
- **No leakage, no operating currents**
- **Improved life expectancy**
- **Impulse currents In/Imax : 15/40 kA**
- **Common Mode and Differential protection**
- **Remote Signaling (option)**
- **EN 50539-11 compliance**
- **UL, VDE and OVE approved**

DS50VGPVS-xxxG/51

- Maximum PV voltage
- «S» = remote signalling status option
- «VG» = VG Technology

Characteristics

CITEL Model		DS50VGPV-600G/51	DS50VGPV-1000G/51	DS50VGPV-1500G/51
Description		Type 2 PV surge protector - 600 Vdc - VG technology	Type 2 PV surge protector - 1000 Vdc - VG technology	Type 2 PV surge protector - 1500 Vdc - VG technology
Network	Uocstc	PV network 600 Vdc	PV network 1000 Vdc	PV network 1250 Vdc
Connection mode		+/-/PE	+/-/PE	+/-/PE
Protection mode(s)		CM/DM	CM/DM	CM/DM
Max. PV operating voltage	Ucpv	720 Vdc	1200 Vdc	1500 Vdc
Current withstand short circuit PV	Iscpv	15000 A	15000 A	15000 A
Permanente operating current - *Leakage current at Ucpv*	Icpv	None	None	None
Residual current - *Leakage current at Ucpv*	Ipe	None	None	None
Nominal discharge current - *15 x 8/20 µs impulses*	In	15 kA	15 kA	15 kA
Max. discharge current -*max. withstand @ 8/20 µs by pole*	Imax	40 kA	40 kA	40 kA
Total Maximal discharge current - *max. total withstand @ 8/20 µs*	Itotal	60 kA	60 kA	60 kA
Protection level CM/DM @In *(8/20µs) and @ 6kV (1.2/50µs)*	Up	2.2/3.4 kV	2.8/5.1 kV	3.4/6.8 kV
Associated disconnectors				
Thermal disconnector		internal		
Fuses		without		
Mechnical characteristics				
Dimensions		see diagram		
Connection to Network		Screw terminals: 2.5-25mm²		
Disconnection indicator		2 mechanical indicators		
Remote signaling of disconnection		Option DS50VGPVS-600G/51 - output on changeover contact	Option DS50VGPVS-1000G/51 - output on changeover contact	Option DS50VGPVS-1500G/51 - output on changeover contact
Mounting		Symmetrical rail 35 mm (EN60715)		
Operating temperature		-40/+85°C		
Protection rating		IP20		
Housing material		Thermoplastic UL94-V0		
Standards compliance		EN50539-11		
Certification		EAC	VDE / OVE / EAC	EAC
Part number		481401	481301	481501

*) CM = Common mode (+/PE or -/PE) - DM = Differential mode (+/-)

Type 2 PV Surge Protector
DS50PV/51 series

DS50PV-800G/51

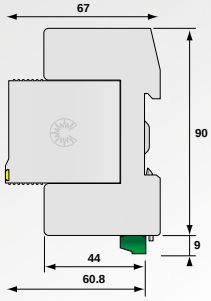

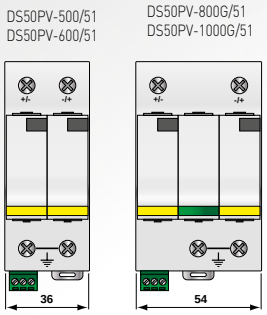

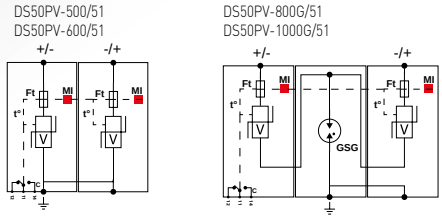

GSG: Specific gas tube
V : High energy MOV
Mi : Disconnection indicator
Ft : Thermal fuse
t° : Thermal disconnection mechanism
C : Contact for remote signal (option DS50PVS-xxx/51)

- **Type 2 Surge Protector for Photovoltaic**
- **In : 15 kA**
- **Imax : 40 kA**
- **Pluggable module**
- **Remote Signaling (option)**
- **EN 50539-11 compliance**
- **VDE and OVE approved**

DS50PVS-xxxG/51

Maximum PV voltage

«S» = remote signalling status option

Characteristics

CITEL Model		DS50PV-500/51	DS50PV-600/51	DS50PV-800G/51	DS50PV-1000G/51
Description		Type 2 PV surge protector - 500 Vdc	Type 2 PV surge protector - 600 Vdc	Type 2 PV surge protector - 800 Vdc	Type 2 PV surge protector - 1000 Vdc
Network	Uocstc	PV network 500 Vdc	PV network 600 Vdc	PV network 800 Vdc	PV network 1000 Vdc
Connection mode		+/-/PE	+/-/PE	+/-/PE	+/-/PE
Protection mode(s)		CM	CM	CM/DM	CM/DM
Max. PV operating voltage	Ucpv	600 Vdc	720 Vdc	960 Vdc	1200 Vdc
Current withstand short circuit PV	Iscpv	15000 A	15000 A	15000 A	15000 A
Permanente operating current - *Leakage current at Ucpv*	Icpv	< 0.1 mA	< 0.1 mA	< 0.1 mA	<0.1 mA
Residual current - *Leakage current at Ucpv*	Ipe	< 0.1 mA	< 0.1 mA	None	None
Nominal discharge current - *15 x 8/20 µs impulses*	In	15 kA	15 kA	15 kA	15 kA
Max. discharge current - *max. withstand @ 8/20 µs by pole*	Imax	40 kA	40 kA	40 kA	40 kA
Total Maximal discharge current - *max. total withstand @ 8/20 µs*	Itotal	60 kA	60 kA	60 kA	60 kA
Protection level CM/DM *@In (8/20µs) and @ 6kV (1.2/50µs)*	Up	2.2 kV	2.8 kV	2 / 3.6 kV	2.6 / 4.6 kV
Associated disconnectors					
Thermal disconnector		internal			
Fuses		without			
Mechnical characteristics					
Dimensions		see diagram			
Connection to Network		Screw terminals: 2.5-25mm²			
Disconnection indicator		2 mechanical indicators			
Remote signaling of disconnection		Option DS50PVS-500/51 - output on changeover contact	Option DS50PVS-600/51 - output on changeover contact	Option DS50PVS-800G/51 - output on changeover contact	Option DS50PVS-1000G/51 - output on changeover contact
Mounting		Symmetrical rail 35 mm (EN60715)			
Operating temperature		-40/+85°C			
Protection rating		IP20			
Housing material		Thermoplastic UL94-V0			
Standards compliance		EN50539-11			
Certification		EAC	EAC	EAC	VDE / OVE / EAC
Part number		480121	480421	480281	480381

*) CM = Common mode (+/PE or -/PE) - DM = Differential mode (+/-)

Surge protector for PV Off-grid site
DS2x0-xxDC series

DS230-48DC

DS252C-48DC/G

DS230-DC

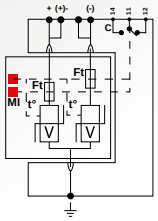

DS252C-48DC/G

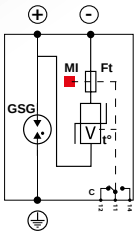

GSG: Specific gas tube
V : High energy MOV
Mi : Disconnection indicator
Ft : Thermal fuse
t° : Thermal disconnection mechanism
C : Contact for remote signal

- **Surge protector for PV off-grid site**
- **from 12 to 350 Vdc**
- **Compact**
- **Imax: 20 to 40 kA**
- **Pluggable module**
- **Remote signalling (option)**
- **For additional information, see page 59**

Characteristics

CITEL Model		DS220-12DC	DS220-24DC	DS252C-48DC/G	DS230-48DC	DS240-75DC	DS240-95DC	DS240-110DC	DS240-130DC	DS240-220DC	DS240-280DC	DS240-350DC
SPD type		2	2	1 + 2	2	2	2	2	2	2	2	2
Network		12 Vdc	24 Vdc	48 Vdc	48 Vdc	75 Vdc	95 Vdc	110 Vdc	130 Vdc	220 Vdc	280 Vdc	350 Vdc
Max. DC operating voltage	Uc	24 Vdc	38 Vdc	75 Vdc	65 Vdc	100 Vdc	125 Vdc	150 Vdc	180 Vdc	275 Vdc	350 Vdc	460 Vdc
Nominal discharge current *- 15 x 8/20 µs impulses*	In	10 kA	10 kA	25 kA	15 kA	20 kA	20 kA	20 kA	20 kA	20 kA	20 kA	20 kA
Impulse current by pole *- max. withstand 10/350µs*	Iimp	-	-	25 kA	-	-	-	-	-	-	-	-
Max. discharge current *-max. withstand Ø 8/20 µs by pole*	Imax	20 kA	20 kA	70 kA	20 kA	40 kA	40 kA	40 kA	40 kA	40 kA	40 kA	40 kA
Protection mode(s)		CM	CM	CM/DM	CM	CM	CM	CM	CM	CM	CM	CM
Protection level	Up	250 V	250 V	1.5/0.5 kV	300 V	390 V	450 V	500 V	620 V	900 V	1200 V	1400 V
Remote signaling of dis-connection		Option DS220S-12DC : output on changeover contact	Option DS220S-24DC : output on changeover contact	output on changeover contact	Option DS230S-48DC : output on changeover contact	Option DS240S-75DC : output on changeover contact	Option DS240S-95DC : output on changeover contact	Option DS240S-110DC : output on changeover contact	Option DS240S-130DC : output on changeover contact	Option DS240S-220DC : output on changeover contact	Option DS240S-280DC : output on changeover contact	Option DS240S-350DC : output on changeover contact
Part number		390101	390501	3415	390401	310601	310301	310701	310801	310201	310501	310901

CITEL

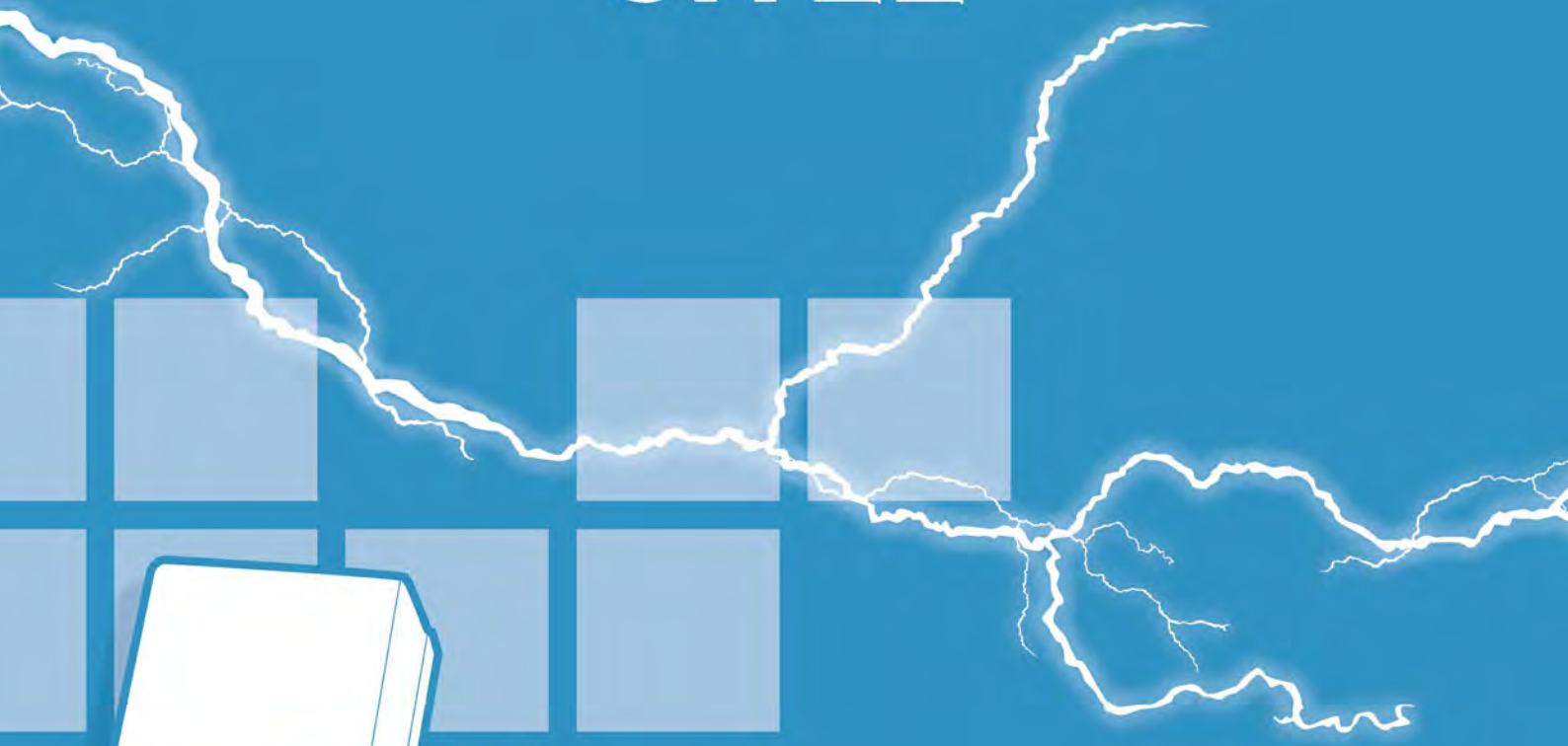

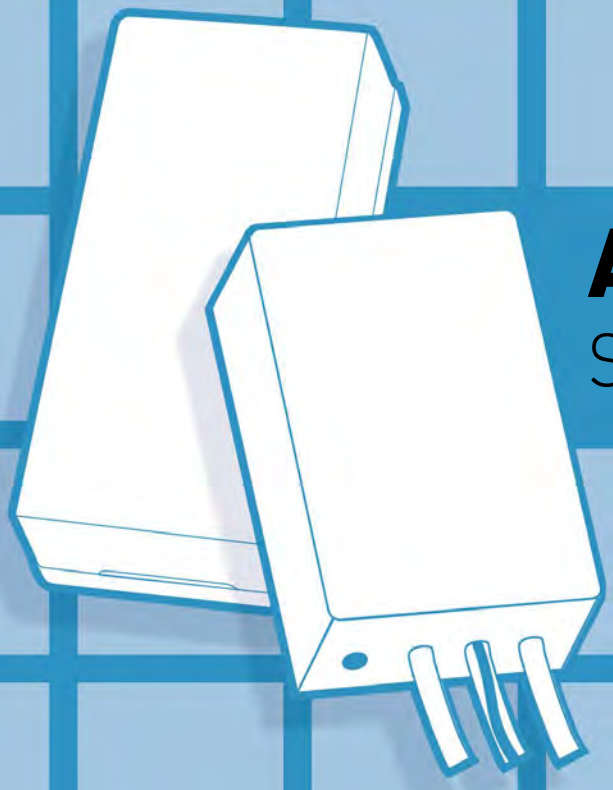

AC POWER

Surge Protectors

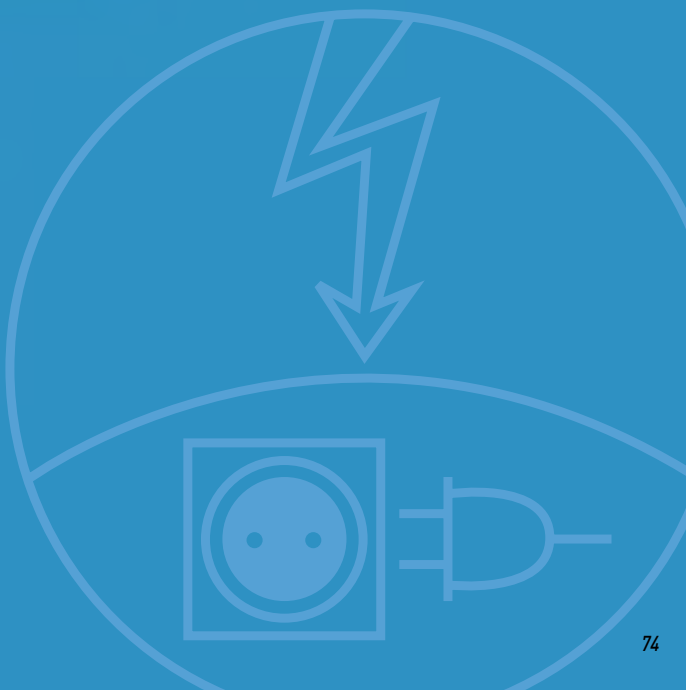

AC Surge Protectors Hard-wired Units and Combiner boxes

CITEL offers a line of surge protectors for the single and three phase AC networks connected to sensitive equipment. These products, are available in various formats:

- Hard-wired units single-phase (MSB, MLP)
- Hard-wired units and combiner box for US market (M serie)

Hard-wired surge protector

MSB series

SPDs Type 2 or 3 for effective protection of sensitive equipment, in addition to the surge protector installation (coordination surge protector). Recommended installation near a sensitive equipment away from the surge protector (> 10 m). These surge protectors utilize a compact and economical scheme based varistors, to obtain a power flow relevant for secondary protection. They are more in accordance with NF EN 61643-11, equipped with internal security which will disconnect the product of their networks for end of life. The operating condition of the arrester is signaled by light (or buzzer for version MSB6). Available in screw terminal connectors or son.

MLP / MLPC series

Complete ranges of compact surge protectors specifically designed for the protection of outdoor lighting equipment with LED technology (see page 83).

Series		*Description*	*Characteristics*	*Page*
MSB		Hard-wired surge protector Type 2 or 3	compact	77-78
M50		Hard-wired surge protector US market	Single-phase or 3-phase	79
M MDS		Surge protector combiner boxes US market	Compliance UL1449 80 to 200 kA	80-81

Metallic enclosure stand alone SPD

M series

M series surge protection devices (M50, M100, M200 and MDS) in metal enclosures belong to a complete family of surge protection devices specifically designed to meet the requirements of the North American surge protection standards: USA and Canada. Respectively, the UL1449 ed4 standard and the C22.2 No.269.1–22.2 No.269.5 standards. These standards define different categories of surge protection devices (SPD) and unfortunately use very close or identical terms compared to the SPD classification used in international and European standards. It is therefore crucial not to confuse these terms and understand their meaning based on the reference standards.

UL Standards

Type 1 - Permanently connected surge protection devices to be installed both, on the supply side and the load side of the equipment main overcurrent protective device. The surge protection devices are supposed to be self-protected against short circuits and do not require external protection.

Type 2 - Permanently connected surge protection devices to be installed on the load side of the equipment main overcurrent protective device. This surge protection device requires an external short circuit protection device.

Type 3 - Surge protection devices installed at a conductor length of 10 meters or greater from the electrical panel. For example, the mobile surge protectors (that can be plugged into the outlet such as a multiple power outlet etc.). They can also be directly installed on the equipment to be protected.

Type 4 « Component Assemblies » - Component Assemblies consisting of one or more Type 5 components and a disconnect complying with the limited end-of-life short circuit current tests (0.5A, 2.5A, 5A and 10A).

Type 1, 2, 3 « Component Assemblies » - Type 4 Component Assemblies having, in addition to the limited end-of-life short circuit current tests, passed all the other end-of-life tests (under the short circuit current of 100A, 500A, 1000A and SCCR) and also with (2CA) or without (1CA) external short circuit protection

Type 5 - Discrete component surge suppressors, such as MOVs, Diode or GDT that may be mounted on a PWB, connected by its leads or provided within an enclosure with mounting means and wiring terminations.

It is therefore clear from these definitions that Type 1 and Type 2 surge protection devices (according to the US-accepted terminology) are not necessarily linked to potential surge hazard as it is in the European approach. Type 1 and Type 2 surge protection devices are determined by the fact whether or not they need a short circuit protection. However, depending on the impulse tests, the minimum levels required for a Type 1, Type 2 and Type 3 surge protection devices are as follows :

Type 1 – 10kA or 20kA 8/20

Type 2 – 3kA, 5kA, 10kA or 20kA 8/20

Type 3 – 6kV/3kA 1,2/50-8/20

It is also understood that the location of the surge protection device imposed by its type is related to a certain stress level naturally being such that: the closer the surge protection device is to the mains connection point the greater its ability to withstand the surge.

Note that the maximum nominal discharge current is set at 20 kA (equivalent to European nominal discharge current (In) but it has no limitation and much lower in energy than the maximum impulse current (Iimp) of European Type 1).

Also important to remember that even if it is very tempting to compare the American voltage protection rating (VPR) and the European voltage protection level (Up), they are not (yet) comparable. The VPR is determined for any type of American SPD by using by a 6 kV, 3 kA combination waveform generator. However, it should be noted that the European Type 3 and the American Type 3 have a lot of similarities.

The concept of "Listed" or "Recognized"

is important to understand particularly regarding the installation according to the American installation rules. A listed product is a device that any electrician can install on an installation (on site) without compromising safety. A recognized device cannot be installed on an installation. It can only be installed on a piece of equipment or a system (e.g. electrical cabinet) by professionals, at the factory, following certain rules and may be a subject to additional tests.

Another disconcerting and confusing aspect is the maximum discharge current (Imax) values indicated for American surge protection devices:

- For an European surge protection device, the Imax value is defined by standards and must be tested if declared.
- For an American surge protection device, Imax has no official definition and completely open to various interpretations by users and manufacturers.

The easiest interpretation is that the Imax does not represent a maximum single shock that the surge protection device can withstand but reflects its durability. This Imax is the algebraic sum of the individual Imax values of possible multiple varistors connected in parallel for each declared protection mode.

For example, if the protection mode (common in the United States) phase with the neutral and the ground connected (usually called "per phase") consists of 5 varistors between the line and the neutral and 5 varistors between the line and the earth (each varistor having an individual Imax value of 40kA), the final declared Imax value will be 5x40+5x40=400kA...

This type of value totally escapes the European logic but is useful information for American users as it gives an idea of the surge protection device capacity in terms of its service life.

Other example, a surge protection device with a In of 20kA and declared Imax of 40kA will not be able to withstand more than 20 shocks of 20kA. On the other hand, a surge protection device having the same In of 20kA and declared Imax of 400kA will be able to withstand more than 2000 shocks of 20kA!

Conversely, the European Type 1 design with its characteristic of 10/350 wave maximum impulse current (Iimp) is completely unknown (and rejected) in America.

4th Edition	**Line Side of Main Disconnect**	**Load Side of Main Disconnect**	**Local Equipment**	**Surge component + Thermal Disconnect (component assembly)**	**Surge Component Only**
	No upstream fuse requested	*Upstream fuse requested*	*Upstream fuse requested + distant 30ft from main panel*	*To be used in equipment/panel. UL additional tests expected*	*To be used in equipment UL additonal test expected*
Listed	Type 1	Type 2	Type 3	-	-
Listed + condition (enclosure) (a)	Open- Type 1	Open- Type 2	Open- Type 3	-	-
Recognized (b)	Type 1CA	Type 2CA	Type 3CA	Type 4CA	Type 5
Required Tests	- SCCR - Intermediate - Limited (10, 5, 2.5 , 0.5 A) - VPR at 6kV/3kA - Nominal Discharge Current (15 x In: 10, 20 kA) - -	- SCCR - Intermediate - Limited (10, 5, 2.5 , 0.5 A) - VPR at 6kV/3kA - Nominal Discharge Current (15 x In: 3, 5, 10, 20 kA) - -	- - - Limited (10, 5, 2.5 , 0.5 A) - VPR at 6kV/3kA - - Operating Duty Cycle (6kV/3kA x 15) -	- - - Limited (10, 5, 2.5 , 0.5 A) - - Nominal Discharge Current (15 x In: 10, 20 kA) - - MLV at In	- - - - - Nominal Discharge Current (15 x In: 10, 20 kA) - - MLV at In
Optional Tests			- Nominal Discharge Current (In x 15)		

(a) field wiring. Can be installed by any electricien on field

(b) factory wiring/use. Cannot be installed on field. Must be installed in certified factorvor in products (Listed or recognised)

Hard-wired AC Surge Protectors
MSB10 series

MSB10-400(UL)

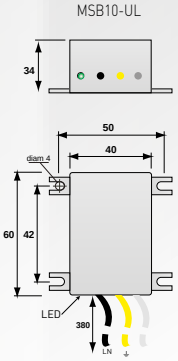

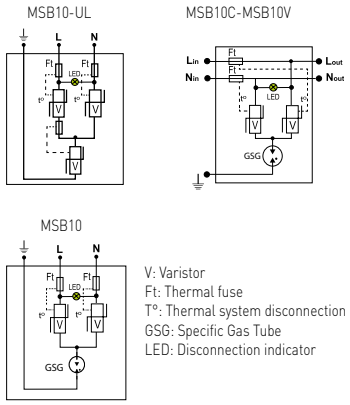

- **Compact Type 2 and 3 surge protectors**
- **Wall mounting and hard wired connection**
- **UL1449 4ed. and IP66 (MSB10-400)**
- **Status indicators**
- **EN 61643-11, IEC 61643-11 and UL1449 4ed. compliance**

Characteristics

CITEL Model		MSB10-400(UL)	MSB10-480(UL)	MSB10-400	MSB10-120	MSB10V-400	MSB10V-120	MSB10C-400
Description		Compact Type 2/3 hard wired surge protector						
Network		230 V single phase	347-480 Vac single phase	230 V single phase	120 V single phase	230 V single phase	120 V single phase	230 V single phase
AC system		TT-TN	TT/TN	TT-TN	TT/TN	TT-TN	TT/TN	TT-TN
Protection mode(s)		CM/DM	CM/DM	CM/DM	CM/DM	CM/DM	CM/DM	CM/DM
Max. AC operating voltage	Uc	300 Vac	550 Vac	255 Vac	150 Vac	255 Vac	150Vac	255 Vac
Max. Load current	IL	-	-	-	-	15 A	16 A	16 A
Residual current *- Leakage current at Uc*	Ic	< 1 mA	< 1 mA	None	None	None	None	None
Temporary Over Voltage (TOV) *Charasteristics - 5 sec.*	UT	335 Vac withstand	700 Vac withstand	335 Vac withstand	180 Vac withstand	335 Vac withstand	180 Vac withstand	335 Vac withstand
Temporary Over Voltage (TOV) *Charasteristics - 120 mn*	UT	440 Vac disconnection	915 Vac disconnection	440 Vac disconnection	230 Vac disconnection	440 Vac disconnection	230 Vac disconnection	440 Vac disconnection
Nominal discharge current	In	3 kA	3 kA	3 kA	3 kA	3 kA	3 kA	3 kA
Max. discharge current *- max. withstand @ 8/20 µs by pole*	Imax	10 kA	10 kA	10 kA	10 kA	10 kA	10 kA	10 kA
Withstand on Combination waveform - *Class III test*	Uoc	6 kV	6 kV	6 kV	6 kV	6 kV	6 kV	6 kV
Withstand on overvoltages *IEEE C62.41.1*		10 kV/10 kA	10 kV/10 kA	10 kV/10 kA	10 kV/10 kA	10 kV/10 kA	10 kV/10 kA	10 kV/10 kA
Protection level CM/DM *@In (8/20µs) and @ 6kV (1.2/50µs)*	Up	1.2 kV/1.2 kV	2 kV/2 kV	1.5 kV/1.5 kV	1 kV/1 kV	1.5 kV/1.5 kV	1 kV/1 kV	1.5 kV/1.5 kV
Admissible short-circuit current	Isccr	10 000 A	10 000 A	10 000 A	10 000 A	10 000 A	10 000 A	10 000 A
Associated disconnectors								
Thermal disconnector		internal						
Installation ground fault breaker		Type «S» or delayed						
Mechnical characteristics								
Dimensions		see diagram						
Connection to Network		wires	wires	wires	wires	screw terminal	screw terminal	screw terminal
Voltage/operating indicator		Green led ON						
Failsafe behavior		Disconnection	Disconnection	Disconnection	Disconnection	Disconnection and AC line cut-off	Disconnection and AC line cut-off	Disconnection and AC line cut-off
Disconnection indicator		Green led OFF						
Mounting		Wall or plate						
Operating temperature		-40/+85°C						
Protection rating		IP66	IP66	IP65	IP65	IP20	IP20	IP20
Housing material		Thermoplastic UL94-V0						
Standards compliance		IEC 61643-11 / EN 61643-11 / UL1449 ed.4						
Certification		UL / EAC / TUV	UL / EAC	EAC	EAC	EAC	EAC	EAC
Part number		561501	561801	561201	561601	561101	561602	561301

Hard-wired AC Surge Protectors
MSB6 series

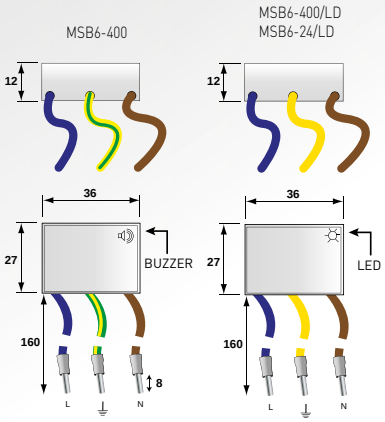

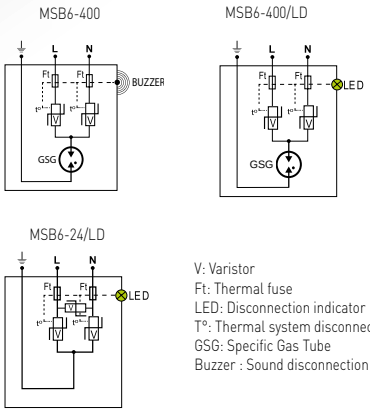

V: Varistor
Ft: Thermal fuse
LED: Disconnection indicator
T°: Thermal system disconnection
GSG: Specific Gas Tube
Buzzer : Sound disconnection indicator

- **Ultra Compact Type 3 surge protectors for 230 Vac networks**
- **Mounting on plate or terminal**
- **Disconnection signaling by buzzer or Led system**
- **24 V AC or DC version available**
- **EN 61643-11, IEC 61643-11 and UL1449 4ed. compliance**

Characteristics

CITEL Model		MSB6-400	MSB6-24/LD	MSB6-400/LD
Description		Compact Type 2 hard wired surge protector	Ultra Compact Type 2 hard wired surge protector	Ultra Compact Type 2 hard wired surge protector
Network		230 V single phase	24 Vac-30Vdc	230 V single phase
AC system		TT-TN	-	TT-TN
Protection mode(s)		CM/DM	CM/DM	CM/DM
Max. AC operating voltage	Uc	255 Vac	30 Vac-38 Vdc	255 Vac
Residual current *- Leakage current at Uc*	Ic	None	None	None
Temporary Over Voltage (TOV) Charasteristics - 5 sec.	UT	335 Vac withstand	36 Vac withstand	335 Vac withstand
Temporary Over Voltage (TOV) Charasteristics - 120 mn	UT	440 Vac disconnection	42 Vac disconnection	440 Vac disconnection
Nominal discharge current *- 15 x 8/20 µs impulses*	In	3 kA	0.5 kA	3 kA
Max. discharge current *-max. withstand @ 8/20 µs by pole*	Imax	6 kA	2 kA	6 kA
Withstand on Combination waveform *- Class III test*	Uoc	6 kV	1 kV	6 kV
Withstand on overvoltages *IEEE C62.41.1*		6 kV/6 kA	-	6 kV/6 kA
Protection level CM/DM *@In (8/20µs) and @ 6kV (1.2/50µs)*	Up	1.5 kV/1.5 Kv	0.18 kV/0.18 Kv	1.5 kV/1.5 kV
Admissible short-circuit current	Isccr	3 000 A	3 000 A	3 000 A
Associated disconnectors				
Thermal disconnector		internal		
Installation ground fault breaker		Type «S» or delayed		
Mechnical characteristics				
Dimensions		see diagram		
Connection to Network		wires		
Voltage/operating indicator		without	Green Led ON	Green Led ON
Failsafe behavior		Disconnection		
Disconnection indicator		buzzer ON	Led OFF	Led OFF
Mounting		AC outlet or screw terminal	AC outlet or screw terminal	AC outlet or screw terminal
Operating temperature		-40/+85°C		
Protection rating		IP20		
Housing material		Thermoplastic UL94-V0		
Standards compliance		IEC 61643-11 / EN 61643-11 / UL1449 ed.4		
Part number		561302	561313	561312

Hard-wire AC surge protector
M50 series

M50-120Y-B

M50-xxx-A

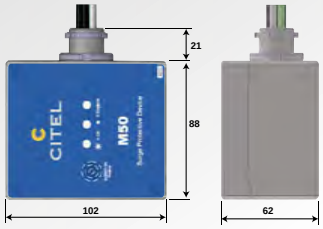

M50-xxx-B

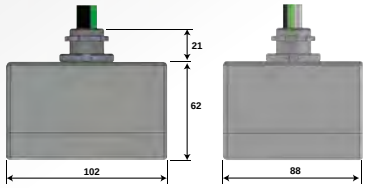

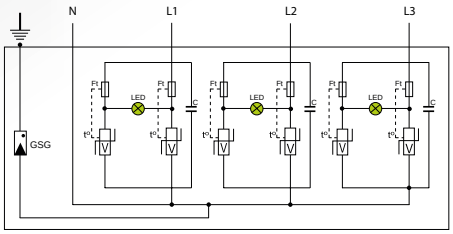

LED : Disconnection indicator
Ft : Thermal fuse
GSG : Specific gas tube
V: High energy varistor

- **For AC Single Phase and 3-phase network (wye, delta, split phase)**
- **In : 20 kA**
- **Imax : 50 kA**
- **No leakage current**
- **Visual indicator and audible Alarm**
- **2 formats :side or back nipple**
- **UL 1449 4ed. certification**

M50-120Y-B

- Output type: A: side nipple, B: back nipple
- AC network type
- AC voltage network

Characteristics

Model		M50-120Y-*	M50-120T-*	M50-120S-*	M50-230S-*	M50-240T-*	M50-240D-*	M50-277Y-*	M50-347Y-*	M50-480D-*	M50-600D-*
System voltage		120-208 V	120-240 V	120 V	230 V	240-480V	240 V	277-480 V	347-600 V	480 V	600 V
AC System		4W+G Wye	3W+G Split Phase	2W+G Single Phase	2W+G Single Phase	3W+G Split Phase	3W+G Delta	4W+G Wye	4W+G Wye	3W+G Delta	3W+G Delta
Frequency		50 - 60 Hz	50 - 60 Hz	50 - 60 Hz	50 - 60 Hz	50 - 60 Hz	50 - 60 Hz	50 - 60 Hz	50 - 60 Hz	50 - 60 Hz	50 - 60 Hz
Residual current -*Leakage current at MCOV*	Ipe	None	None	None	None	None	None	None	None	None	None
Maximum Operating Voltage L- PE	MCOV	140 V	140 V	140 V	270 V	280 V	280 V	320 V	400 V	550 V	690 V
Maximum Operating Voltage L- N	MCOV	140 V	140 V	140 V	270 V	280 V	-	320 V	400 V	-	-
Maximum Operating Voltage N-PE	MCOV	120 V	120 V	120 V	230 V	240 V	-	280 V	350 V	-	-
Maximum Operating Voltage L-L	MCOV	240 V	280 V	-	-	480 V	280 V	560 V	560 V	560 V	690 V
Short Circuit Current Rating	SCCR	200 kA	200 kA	200 kA	200 kA	200 kA	200 kA	200 kA	200 kA	200 kA	200 kA
Follow current	If	None	None	None	None	None	None	None	None	None	None
Nominal discharge current *15 x 8/20 µs impulses*	In	20 kA	20 kA	20 kA	20 kA	20 kA	20 kA	20 kA	20 kA	20 kA	20 kA
Max. discharge current L-N *max. withstand @ 8/20 µs*	Imax	50 kA	50 kA	50 kA	50 kA	50 kA	50 kA	50 kA	50 kA	50 kA	50 kA
Max. discharge current N-PE *max. withstand @ 8/20 µs*	Imax	100 kA	100 kA	100 kA	100 kA	100 kA	100 kA	100 kA	100 kA	100 kA	100 kA
Total lightning current *max. total withstand @ 8/20 µs*	Itotal (8/20)	100 kA	100 kA	100 kA	100 kA	100 kA	100 kA	100 kA	100 kA	100 kA	100 kA
Total lightning current *max. total withstand @ 10/350 µs*	Itotal (10/350)	15 kA	12 kA	8 kA	8 kA	12 kA	12 kA	15 kA	15 kA	12 kA	12 kA
Voltage Protection Rating L-PE	VPR	1400 V	1400 V	1400 V	1300 V	1300 V	1400 V	1300 V	2000 V	1300 V	2000 V
Voltage Protection Rating L-N	VPR	600 V	600 V	600 V	1200 V	1200 V	-	1200 V	2000 V	-	-
Voltage Protection Rating N-PE	VPR	1300 V	1300 V	1300 V	1300 V	1300 V	-	1300 V	1800 V	-	-
Voltage Protection Rating L-L	VPR	1100 V	1100 V	-	-	2100 V	1100 V	2100 V	3000 V	2100 V	2600 V
Associated disconnectors											
Maximum Recommanded fuse		200 A, Class J									
Thermal disconnector		internal									
Mechnical characteristics											
Dimensions		see diagram									
Visual disconnection indicator		LED off									
Sound disconnection indicator		Continuous Buzzer									
Connection to Network		AWG12 wires - 24 '' length									
Operating Temperature		-40/+85 C°									
Housing material		Aluminum cast									
Mounting type		Side or back nipple (Version A or B) Threaded (M22) - NTP 1/2 adaptor available									
Environmental rating		IP66 / NEMA 6									
Location Installation		Indoor / outdoor									
Standard Compliance		IEC 61643-11									
Certification**		UL1449 ed4 - File E326289 1CA									
Part Number											
for A version (side nipple)		89750101	89750102	89750103	89750303	89750402	89750404	89750501	89750601	89750704	89750804
for B version (back niplle)		89750111	89750112	89750113	89750313	89750412	89750414	89750511	89750611	89750714	89750814

* = A or B
** M50-347Y = UL pending

UL LISTED

Specific AC Surge Protection Panels
Series M

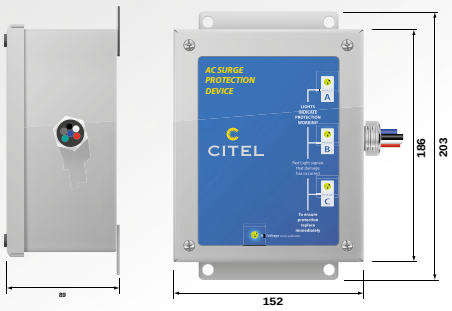

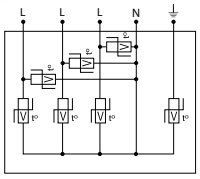

GSG : Specific gas tube
V: High energy varistor

- **Imax from 80 to 200 kA (8/20µs)**
- **All mode of protection**
- **200 kA short-circuit fault current rated**
- **Multi-redundant protection circuit per phase**
- **Full on-board diagnostics - LED indicators, remote and audible alarms**
- **EMI/RFI noise filtering**
- **NEMA 4/12 enclosure**
- **UL 1449 4ed. compliant**
- **Lightning counter (option)**

Characteristics

Series	M80	M100	M160	M200
Max. discharge current by phase Imax	80 kA	100 kA	160 kA	200 kA
Type of Network				
120/240 Vac Split Phase 3Ph+PE	M80-120T	M100-120T	M160-120T	M200-120T
120/208 Vac Wye 3Ph/N+PE	M80-120Y	M100-120Y	M160-120Y	M200-120Y
220/380 Vac Wye 3Ph/N+PE	M80-220Y	M100-220Y	M160-220Y	M200-220Y
277/480 Vac Wye 3Ph/N+PE	M80-277Y	M100-277Y	M160-277Y	M200-277Y
240/415 Vac Wye 3Ph/N+PE	M80-240Y	M100-240Y	M160-240Y	M200-240Y
120/120/240 Vac Hi-Leg Delta 3Ph/N PE	M80-240DCT	M100-240DCT	M160-240DCT	M200-240DCT
240 Vac Delta 3Ph+PE	M80-240D	M100-240D	M160-2s40D	M200-240D
347/600 Vac Wye 3Ph/N+PE	M80-347Y	M100-347Y	M160-347Y	M200-347Y
480 Vac Delta 3Ph+PE	M80-480D	M100-480D	M160-480D	M200-480D
Protection modes	L/N - L/PE - N/PE - L/L			
Admissible short-circuit current	200 kA			
RFI filtering	- 40 dB			
Standards compliance	UL1449 4rd edtion -IEC 61643-1			
Safety				
Thermal disconnector	internal to each surge protector			
Electrical disconnector	internal to each panel			
Failure indicators	by Led			
Failure indicators in option	audible alarm and remote signaling			
Mechanical characteristics				
Housing material	Metal - NEMA 4/2			
Operating temperature	-40/+85 °C			
Mounting	Wall mounting by screws (not supplied)			
Connection to AC network	on screw terminal			
Dimensions (H x L x D)	203 x 152 x 101 mm (8''x 6''x 4'')			
Specific features				
Disconnection switch	no			

LISTED

Version	Network	Voltage max. (Uc)	Residual voltage (V) following UL1449/3500A			
			L-N	L-PE	N-PE	L-L
Mxxx-120T	120/240 Vac Split Phase 3Ph+PE	150Vac	800	900	800	1800
Mxxx-120Y	120/208 Vac Wye 3Ph/N+PE	150Vac	800	900	800	1800
Mxxx-220Y	220/380 Vac Wye 3Ph/N+PE	320Vac	1500	1200	1200	2000
Mxxx-277Y	277/480 Vac Wye 3Ph/N+PE	320Vac	1500	1200	1200	2000
Mxxx-240Y	240/415 Vac Wye 3Ph/N+PE	320Vac	1500	1200	1200	2000
Mxxx-240DCT	120/120/240 Vac Hi-Leg Delta 3Ph/N PE	150/320Vac	1500	1200	1200	1800
Mxxx-240D	240 Vac Delta 3Ph+PE	320Vac	-	1200	-	2000
Mxxx-347Y	347/600 Vac Wye 3Ph/N+PE	550Vac	1800	1800	1800	3000
Mxxx-480D	480 Vac Delta 3Ph+PE	500Vac	-	1800	-	3000

Specific AC Surge Protection Panels
Series MDS

MDSXXX X-xxx x

- Configuration (T,Y,D)
- Voltage (L-N or L-L for Delta)
- « » = Basic (Diagnostic by phase, audible alarm, remote alarm)
- «**S**» = Standard (Internal fuse, Diagnostic by phase, audible alarm, remote alarm)
- «**E**» = Enhanced (Internal fuse, external disconnect switch, Diagnostic by phase, audible alarm, remote alarm, surge counter)
- Imax

- **Type 1 surge protection panels**
- **Real time diagnostics**
- **Optional integrated disconnect**
- **Itotal : 300kA , 600 kA, 750 kA**
- **UL1449 edition 4**

Characteristics

CITEL model		**MDS300***			
Suffixe		-120T -120Y	-220Y -240Y -240D	-277Y -347Y	-480D -600D
Network		120/240 V 120/208 V	220/380 V 240/415 V 240 V	277/480 V 347/600 V	480 V 600 V
Max. operating voltage - L-PE	MCOV	150-210 V	300-420 V	420-460 V	550 V
Temporary Over Voltage (TOV) Charasteristics	Ut	175 Vac	335 Vac	420 Vac	840 Vac
Nominal discharge current - *15 impulses 8/20µs*	In	20 kA	20 kA	20 kA	20 kA
Total lightning current - *8/20µs*	Itotal	300 kA	300 kA	300 kA	300 kA
Max. lightning current - *1 impulse 10/350µs*	Iimp	22 kA	22 kA	22 kA	22 kA
Follow current	If	none	none	none	none
Protection level* at 3 kA + connection	VPR	900	1200	1800	2000
Protection level * at In	Up	900	1200	1800	2000
Short-circuit current	SCCR	200 kA	200 kA	200 kA	200 kA
Associated disconnectors					
Max. recommended fuse		200 A - Classe J			
Thermal disconnector		Included			
Mechanical characteristics					
Dimensions		See diagram			
Connection		screw terminals, mini 4.5 mm²			
Remote signal indicator		250 Vac max, 2A			
Mounting		Wallmount by screws (not supplied)			
Operating temperature		-50°C/+85°C			
Protection class		NEMA 4 / IP56 / Outdoor			
Housing material		Metal, Stainless steel option			
Standards compliance		NF EN 61643-11 / UL1449 ed.4			
Part number		consult us			

* : depends on versions and modes

CE c UL us LISTED RoHS

Specific AC Surge Protection Panels
Series MDS

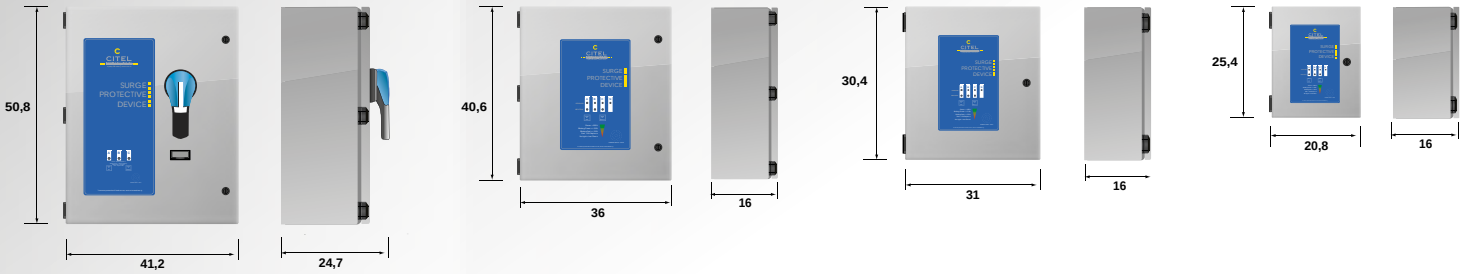

MDS600*			
-120T -120Y	-220Y -240Y -240D	-277Y -347Y	-480D
120/240 V 120/208 V	220/380 V 240/415 V 240 V	277/480 V 347/600 V	480 V 600 V
150-210 V	300-420 V	420-460 V	550 V
175 Vac	335 Vac	420 Vac	840 Vac
20 kA	20 kA	20 kA	20 kA
600 kA	600 kA	600 kA	600 kA
44 kA	44 kA	44 kA	44 kA
none	none	none	none
900	1200	1800	2000
900	1200	1800	2000
200 kA	200 kA	200 kA	200 kA
200 A - Classe J			
Included			
See diagram			
screw terminals, mini 4.5 mm²			
250 Vac max, 2A			
Wallmount by screws (not supplied)			
-50°C/+85°C			
NEMA 4 / IP56 / Outdoor			
Metal, Stainless steel option			
NF EN 61643-11 / UL1449 ed.4			
consult us			

MDS750*			
-120T -120Y	-220Y -240Y -240D	-277Y -347Y	-480D -600D
120/240 V 120/208 V	220/380 V 240/415 V 240 V	277/480 V 347/600 V	480 V 600 V
150-210 V	300-420 V	420-460 V	550 V
175 Vac	335 Vac	420 Vac	840 Vac
20 kA	20 kA	20 kA	20 kA
750 kA	750 kA	750 kA	750 kA
55 kA	55 kA	55 kA	55 kA
none	none	none	none
900	1200	1800	2000
900	1200	1800	2000
200 kA	200 kA	200 kA	200 kA
200 A - Classe J			
Included			
See diagram			
screw terminals, mini 4.5 mm²			
250 Vac max, 2A			
Wallmount by screws (not supplied)			
-50°C/+85°C			
NEMA 4 / IP56 / Outdoor			
Metal, Stainless steel option			
NF EN 61643-11 / UL1449 ed.4			
consult us			

CITEL

LED systems

Surge Protectors

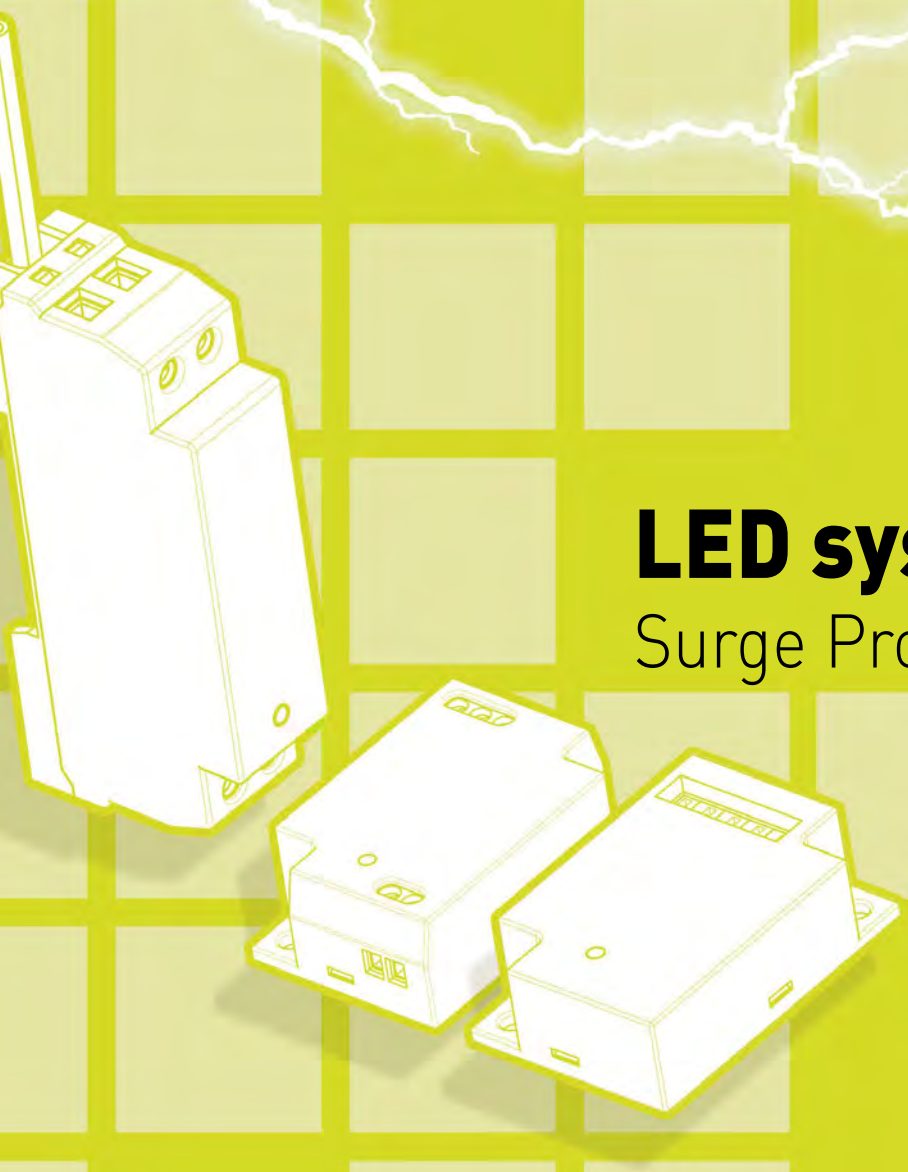

Surge Protectors for LED lighting system

LED street lighting is now widely used for its efficiency, its energy cost savings and its life expectancy.
Nevertheless this attractive technology has an important weakness: its sensitivity to transient voltages created by lightning or by power switch operations on AC network.

Due to its scattered and over-exposed location, LED lighting system will face induced surges which will create failure of its power supply, damage LED components or loss of the lighting efficiency. For these reasons, the use of relevant surge protectors located upstream the LED lighting systems is highly recommended.

CITEL offers a full range of surge protectors designed to be installed at different points on the lighting network such as streetlights, the base of poles and street cabinets.
CITEL offers solutions adapted to every type of outdoor LED lighting systems : urban, architectural, tunnels etc...

Hard-wired surge protector

MLP series

MLP range is a complete range of AC surge protectors specifically designed by CITEL for the protection of LED lighting systems at the lantern.
Many versions have been proposed to meet the various existing configurations : surge protection devices are available in different isolation classes (Class 1, Class 2) and connection type (wire or screw terminal). Some versions are equipped with additional protection for data line option (RS485,DALI, 0-10V) to provide a complete solution for LED systems with control lines.

In cases of extreme aggression, the surge protector will be in a state of retirement security: according to the different versions available, an indication of the failure of the surge protector is performed by the extinction of an indicator, a AC power supply failure and / or through a remote signalisation.

MLPC series

The MLPC range is a compact solution surge protectors to be installed in small spaces. These devices are available in 2 types of connectors (screw terminal or spring) and in two orientations wiring (input / output opposite or input / output on the same side) in order to adapt to the installation as much as possible.
In cases of extreme aggression, lightning MLPC1 will be in a state of safe end of life: the indication of failure (disconnection) of the surge protector is performed by the extinction of an indicator and switching off the AC (extinction street luminaire) inform the user of the need for maintenance.

Series		*Description*	*Characteristics*	*Page*
MLPC		Compact Hard-wired surge protector Type 2 and Type 3	Compact. Many configurations	87
MLP		Hard-wired surge protector Type 2 or 3	Remote signaling and Data in option	89
MLPX		Ultra-compact hard-wired surge protector Type 2+3	Ultra compact IP67 VG Technology	91
MSB6		Hard-wired surge protector **Type 3**	Very Compact. Buzzer indicator	77
DSLP **DLPM**		DIN surge protector Type 2 or 3	Compact. Montage DIN	92
DS98L		**DIN surge protector** **Type 2 or 3**	Double connector. DIN mounting	93

MLPX series

The MLPX range is an ultra compact surge protection solution for installation in extremely tight spaces.
These surge protectors are available with an output by drivers and fixing bracket. In the end of life of security the MLPX indicates its failure (disconnection) by the extinction of an indicator and AC power supply switching off (extinction of the candelabra) inform the user of the need for maintenance.
The MLPX is available in IP67.
MLPXVG version : VG Technology, improved coordination with driver.

MSB6 series

These very compact surge protectors can be integrated in the very small volumes of certain lights (linear LEDs). The surge protection circuit is equipped with an end of life indicator buzzer in order to indicate the disconnection of the surge protector.

DSLP / DLPM series

This device is installed inside the bottom of the lighting pole : its very compact dimension allows a easy integration with the connection box, on DIN rail .
DSLP1 is based on a powerful association of MOV and GDT components, secured by thermal disconnector and connection light indicator. The DLPM version offers a mechanical indicator in order to inform about the status of the SPD without voltage supply.

DS98L series

The DS98L range is a series of AC surge protector for DIN assembly designed to be installed inside boxes at the bottom of poles: its high load current and double output connection allow several LED circuits to be protected. The DS98L is based on an efficient combination of a varistor and a gas discharge tube, secured by thermal disconnector and status indicator.

Street cabinet protection

In order to ensure the real security of the lighting network, the main AC cabinet must also be protected by surge protection devices: surge protectors on the AC network (e.g.: DS40 range) and, if present, surge protectors on the data circuit (e.g.: DLA range).

Surge Protectors for LED lighting system
MLPC series

- **Type 2 (or 3) surge protectors for Led lighting**
- **Very compact**
- **Plate mounting**
- **Screw terminal or spring terminal connection**
- **Status indicator**
- **End of life AC Disconnection**
- **IEC 61643-11 and EN 61643-11 compliance**
- **TUV certification**

MLPC1-230L-V/50

- _ : separated in/out terminals (3pts/2pts)
  50 : common in/out terminals (5pts)
- V : Screw terminal connection
  R : Spring terminal connection
- L : Line disconnection failure mode
- 230 : 220-240 Vac Voltage
- 1 : for Class I equipment
  2: for Class II equipment

MLPC1-230L-V

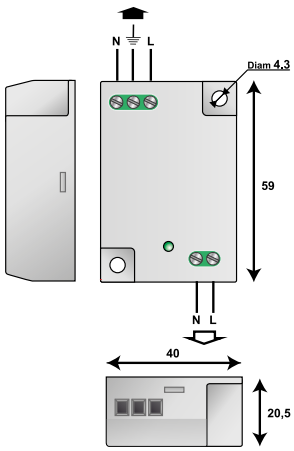

MLPC1-230L-R

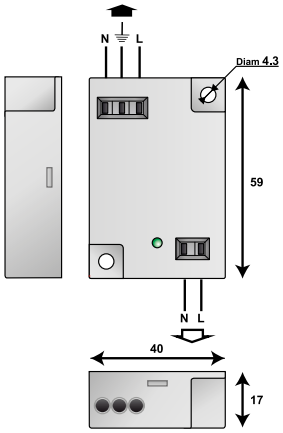

MLPC1

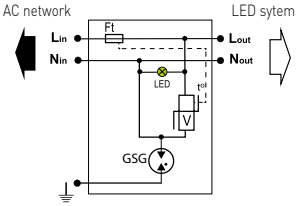

MLPC2

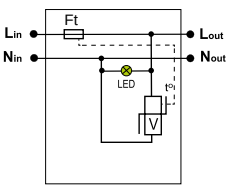

Ft: Thermal fuse
Led: Status indicator
V: MOV
GSG: Specific Gas Tube
T°: Thermal system disconnection

MLPC1-230L-V/50

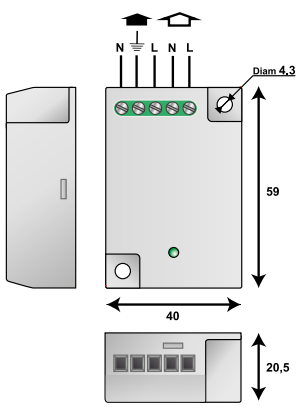

MLPC1-230L-R/50

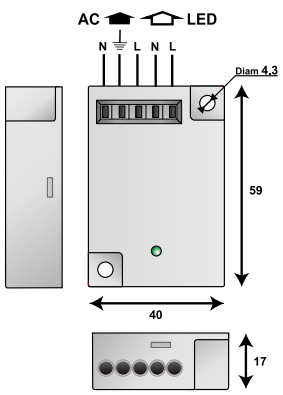

MLPC2-230L-R

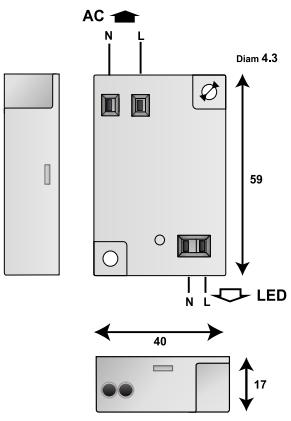

Surge Protectors for LED lighting system
MLPC series

Characteristics

CITEL Model		MLPC1-230L*		MLPC2-230L-R	
Description		Surge protectors for LED lighting system Class 1		Surge protectors for LED lighting system Class 2	
Network		220-240 V single phase		220-240 V single phase	
AC system		TT/TN		TT/TN	
Protection mode(s)		CM/DM		DM	
Max. AC operating voltage	Uc	320 Vac		320 Vac	
Max. Load current	IL	5 A		5 A	
Residual current - *Leakage current at Uc*	Ipe	none		none	
Temporary Over Voltage (TOV) Charasteristics - 5 sec.	UT	335 Vac withstand		335 Vac withstand	
Temporary Over Voltage (TOV) Charasteristics - 120 mn	UT	440 Vac disconnection		440 Vac disconnection	
Temporary Over Voltage N/PE (TOV HT)	UT	1200 V/300A/200 ms disconnection		-	
Nominal discharge current - *15 x 8/20 µs impulses*	In	5 kA		5 kA	
Max. discharge current -*max. withstand @ 8/20 µs by pole*	Imax	10 kA		10 kA	
Total lightning current - *max. total withstand @ 8/20 µs*	Itotal	20 kA		20 kA	
Withstand on Combination waveform - Class III test	Uoc	10 kV/5 kA		10 kV/5 kA	
Withstand on overvoltages IEEE C62.41.1		10 kV/10 kA		10 kV/10 kA	
Protection level CM/DM @In (8/20µs) and @ 6kV (1.2/50µs)	Up	1.5 kV/ 1.5 kV		1.5 kV	
Admissible short-circuit current	Isccr	10000 A		10000 A	
Associated disconnectors					
Thermal disconnector		internal			
Installation ground fault breaker		Type "S" or delayed			
Mechnical characteristics					
Dimensions		see diagram			
Connection to Network		Screw (2.5 mm² max) or Spring (1.5 mm² max) contact terminal		2 spring terminals opposite side in/ out - wire 1.5 mm² max.	
Voltage/operating indicator		Green Led ON			
Disconnection indicator		Disconnection			
Failsafe behavior		Led green OFF and AC network cut-off			
Remote signaling of disconnection		none			
Mounting		on plate			
Operating temperature		-40/+85°C			
Protection rating		IP20			
Housing material		Thermoplastic UL94-V0			
Standards compliance		EN 61643-11 / IEC 61643-11			
Model/Part number					
version Spring contact / 2 opposed terminals		MLPC1-230L-R	831211	MLPC2-230L-R	832211
version Screw terminal / 2 opposed terminals		MLPC1-230L-V	831221	-	-
version Spring contact / 1 common terminal		MLPC1-230L-R/50	831212	-	-
version Screw terminal / 1 common terminal		MLPC1-230L-V/50	831222	-	-

CM/DM: Common Mode / Differential Mode

Surge Protectors for LED lighting system
MLP series

- **Type 2 (or 3) surge protector**
- **Class I or Class II configurations**
- **Comprehensive range for all configurations**
- **Compact dimensions**
- **IP65 version**
- **Combined AC/Dataline version**
- **Wire or Screw connection**
- **Max. discharge current 10 kA**
- **Remote signaling (option)**
- **IEC 61643-11 and EN 61643-11 compliance**

MLP1-230L-W/RS

- - : No dataline surge protection
- RS : RS485 or 0-10 V dataline surge protection
- DL : Dali transmission surge protection
- W : Wire connection
- P : Pluggable screw terminal connection
- L : Line disconnection failure mode without remote signal
- LS : Line disconnection failure mode with remote signal
- S : Parallel disconnection failure mode with remote signal
- - : Parallel disconnection failure mode without remote signal
- 230 : 230-277 Vac voltage
- 120 : 110-120 Vac voltage
- 1 : Class I equipment
- 2 : Class II equipment

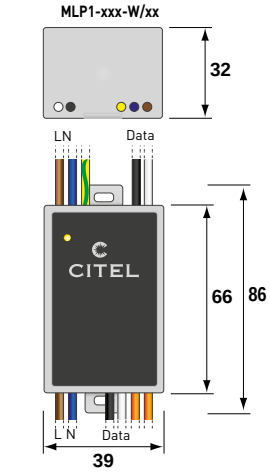

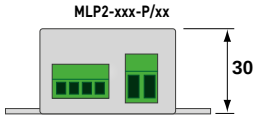

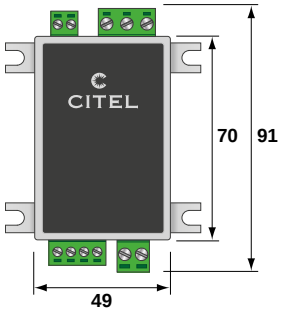

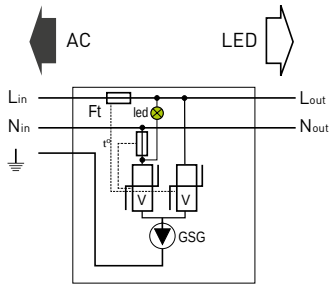

MLP1-230L-W

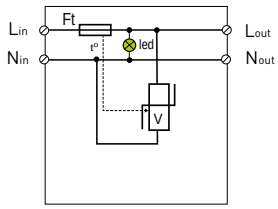

MLP2-230L-P

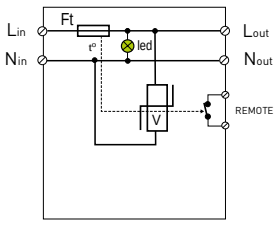

MLP2-230LS-P

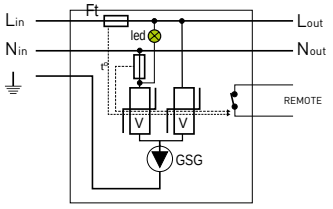

MLP1-230LS-W

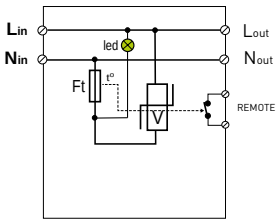

MLP2-230S-P

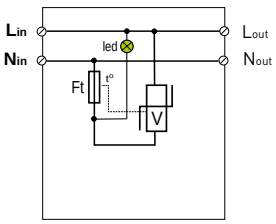

MLP2-230-P

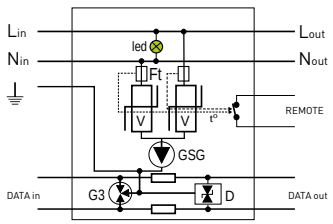

MLP1-230S-W/RS

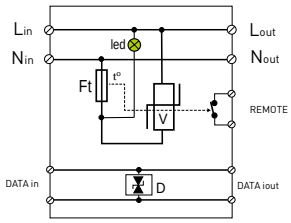

MLP2-230S-P/RS

Ft : Thermal fuse
Led : Status indicator
V : MOV
GSG : Specific Gas Tube
G3 : 3-pole Gas Tube
D : Clamping diode network
Remote : Dry contact for remote signalling

MLP series

Characteristics

CITEL Model		MLP*-120*	MLP*-230*	MLP*/RS	MLP*/DL
		AC voltage specifications		Dataline specifications	
Network		110-120 V single phase	220-240 V single phase	RS485 or 0-10V	DALI
Protection mode(s)		CM/DM	CM/DM	CM/DM	CM/DM
Max. AC operating voltage	Uc	180 Vac	305 Vac	15 V	28 V
Max. Load current	IL	2.5 A	2,5 A	300mA	300mA
Residual current - *Leakage current at Uc*	Ipe	None	None	None	None
Nominal discharge current - *15 x 8/20 µs impulses*	In	5 kA	5 kA	100 A	5 kA
Max. discharge current -*max. withstand @ 8/20 µs by pole*	Imax	10 kA	10 kA	200 A	10 kA
Total lightning current - *max. total withstand @ 8/20 µs*	Itotal	20 kA	20 kA	20 kA	20 kA
Withstand on Combination waveform - *Class III test*	Uoc	10 kV/5 kA	10 kV/5 kA	-	-
Withstand on overvoltages IEEE C62.41.1		10 kV/10 kA	10 kV/10 kA	-	-
Protection level CM/DM *@In (8/20µs) and @ 6kV (1.2/50µs)*	Up	1.5 kV/ 1.2 kV	1.5 kV/ 1.5 kV	30 V	50 V
Admissible short-circuit current	Isccr	10000 A	10000 A	-	-
Mechnical characteristics					
Connection to Network		Screw or spring terminal - 1.5 mm² max		Screw or spring terminal - 1 mm² max	
Voltage/operating indicator		Green Led ON		-	
Failsafe behavior		Led green OFF and AC network cut-off		Short-circuit	
Disconnection indicator		Led green OFF and AC network cut-off or remote signal (option)		Transmission cut-off	
Remote signaling of disconnection		Option		none	
Standards compliance		IEC 61643-11 / EN 61643-11 / UL1449 ed.4		IEC 61643-21 / EN 61643-21 / UL497A	

CM/DM: Common Mode / Differential Mode

Characteristics for version type

CITEL Model		MLP1-230L-W	MLP2-230S-P	MLP1-230L-W/DL	MLP2-230S-P/RS
Description		Surge protector for LED lighting system Class 1	Surge protector for LED lighting system Class 2	AC/Data surge protector for Led lighting system Class 1	AC/Data surge protector for Led lighting system Class 2
AC voltage specifications					
Description		220-240 V single phase	220-240 V single phase	220-240 V single phase	220-240 V single phase
AC system		TT-TN	TT-TN	TT-TN	TT-TN
Protection mode(s)		CM/DM	DM	CM/DM	DM
Max. AC operating voltage	Uc	305 Vac	305 Vac	305 Vac	305 Vac
Max. Load current	IL	2,5 A	2,5 A	2.5 A	2,5 A
Residual current - *Leakage current at Uc*	Ipe	None	None	None	None
Temporary Over Voltage (TOV) Charasteristics - *5 sec.*	UT	335 Vac withstand	335 Vac withstand	335 Vac withstand	335 Vac withstand
Temporary Over Voltage (TOV) Charasteristics - *120 mn*	UT	440 Vac dIsconnection	440 Vac dIsconnection	440 Vac disconnection	440 Vac dIsconnection
Nominal discharge current - *15 x 8/20 µs impulses*	In	5 kA	5 kA	5 kA	5 kA
Max. discharge current -*max. withstand @ 8/20 µs by pole*	Imax	10 kA	10 kA	10 kA	10 kA
Total lightning current - *max. total withstand @ 8/20 µs*	Itotal	20 kA	20 kA	20 kA	20 kA
Withstand on Combination waveform - *Class III test*	Uoc	10 kV/5 kA	10 kV/5 kA	10 kV/5 kA	10 kV/5 kA
Withstand on overvoltages IEEE C62.41.1		10 kV/10 kA	10 kV/10 kA	10 kV/10 kA	10 kV/10 kA
Protection level CM/DM *@In (8/20µs) and @ 6kV (1.2/50µs)*	Up	1.5 kV/ 1.5 kV	1.5 kV	1.5 kV/ 1.5 kV	1.5 kV
Admissible short-circuit current	Isccr	10000 A	10000 A	10000 A	10000 A
Connection to Network		wire 1.5mm² max	screw 1.5mm² max	wire 1.5mm² max	screw 1.5mm² max
Voltage/operating indicator		Green Led ON	Green Led ON	Green led ON	Green Led ON
Failsafe behavior		Disconnection from AC line	Disconnection from AC line	Disconnection rom AC line	Disconnection from AC line
Disconnection indicator		Green Led OFF and AC line cut-off	Green Led OFF and remote signaling	Green Led OFF and AC line cut-off	Green Led OFF and remote signaling
Remote signaling of disconnection		none	yes : output on contact NO	none	yes : output on contact NO
Associated disconnectors					
Thermal disconnector		internal	internal	internal	internal
Installation ground fault breaker		Type "S" or delayed	Type "S" or delayed	Type "S" or delayed	Type "S" or delayed
Dataline specifications					
Network		-	-	DALI	RS485 or 0-10V
Nominal line voltage	Un	-	-	24 V	12 V
Max. DC operating voltage	Uc	-	-	28 V	15 V
Max. Load current	IL	-	-	300mA	300mA
Max. frequency	f max	-	-	10 MHz	10 MHz
Insertion loss		-	-	< 1dB	< 1dB
Nominal discharge current - *15 x 8/20 µs impulses*	In	-	-	5 kA	100 A
Max. discharge current -*max. withstand @ 8/20 µs by pole*	Imax	-	-	10 kA	200 A
Protection level	Up	-	-	50 V	30 V
Connection to Network		-	-	wire 1 mm² max	wire 1 mm² max
Disconnection indicator		-	-	Transmission cut-off	Transmission cut-off
Mechnical characteristics					
Dimensions		see diagram	see diagram	see diagram	see diagram
Mounting		on plate	on plate	on plate	on plate
Operating temperature		-40/+85°C	-40/+85°C	-40/+85°C	-40/+85°C
Protection rating		IP65	IP20	IP65	IP20
Housing material		Thermoplastic UL94-V0	Thermoplastic UL94-V0	Thermoplastic UL94-V0	Thermoplastic UL94-V0
Standards compliance		IEC 61643-11 / EN 61643-11 / UL1449 ed.4		IEC 61643-11 / EN 61643-11 / UL1449 ed.4 IEC 61643-21 / EN 61643-21 / UL497A	
Part number		711211	721202	711231	721242

Hard-wired single-phase Type 2 + 3 AC surge protector
MLPX series

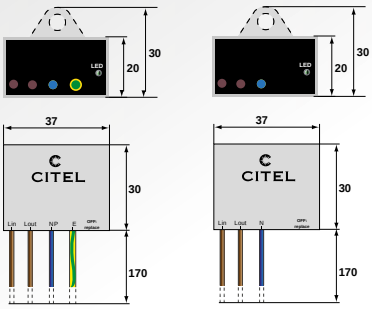

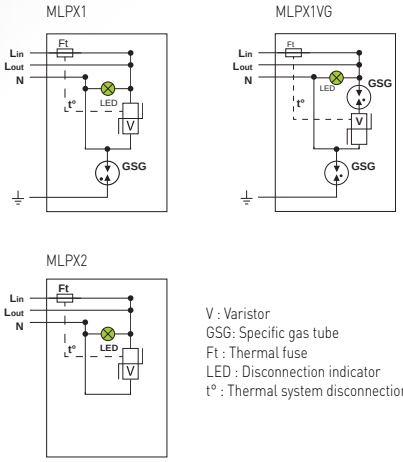

V : Varistor
GSG: Specific gas tube
Ft : Thermal fuse
LED : Disconnection indicator
t° : Thermal system disconnection

- **Ultra compact Type 2 + 3 surge protector for 230 Vac networks**
- **For Classe I and Classe II**
- **Wall mounting and hard wired connection**
- **Breakable mounting bracket**
- **Protection rating : IP67**
- **VG Technology (MLPX1VG)**
- **improved coordination with driver (MLPX1VG)**
- **Disconnection signaling by indicator**
- **AC disconnection in case of end of life**
- **EN 61643-11, IEC 61643-11 and UL1449 4ed. compliance**

Characteristics

CITEL Model		MLPX1-230L-W	MLPX1VG-230L-W	MLPX2-230L-W
Description		Compact Type 2 +3 hard-wired surge protector		
Application		Classe I	Classe I	Classe II
Network		230-277 V single phase	230-277 V single phase	230-277 V single phase
AC system		TT/TN	TT/TN	TT/TN
Protection mode(s)		CM/DM	CM/DM	DM
Max. AC operating voltage	Uc	320 Vac	320 Vac	320 Vac
Max. Load current	IL	10 A	10 A	10 A
Residual current - Leakage current at Uc	Ipe	none	none	none
Temporary Over Voltage (TOV) Charasteristics - 5 sec.	UT	335 Vac withstand	335 Vac withstand	335 Vac withstand
Temporary Over Voltage (TOV) Charasteristics - 120 mn	UT	440 Vac dIsconnection	440 Vac disconnection	440 Vac dIsconnection
Temporary Over Voltage N/PE (TOV HT)	UT	1200 V/300A/200 ms disconnection	1200 V/300A/200 ms disconnection	NA
Nominal discharge current *- 15 x 8/20 µs impulses*	In	5 kA	5 kA	5 kA
Max. discharge current *-max. withstand @ 8/20 µs by pole*	Imax	10 kA	10 kA	10 kA
Total max. discharge current *- max. total withstand @ 8/20 µs*	Itotal	20 kA	20 kA	NA
Withstand on Combination waveform *- Class III test*	Uoc	10 kV	10 kV	10 kV
Withstand on overvoltages IEEE C62.41.1		10 kV/10 kA	10 kV/10 kA	10 kV/10 kA
Protection level CM/DM *@In (8/20µs) and @ 6kV (1.2/50µs)*	Up	1.5 kV/1.5 kV	1.5 kV/1.5 kV	1.5 kV
Admissible short-circuit current	Isccr	10000 A	10000 A	10000 A
Associated disconnectors				
Thermal disconnector		internal		
Installation ground fault breaker		Type «S» or delayed		
Mechnical characteristics				
Dimensions		see diagram		
Connection to Network		by wires :1.5 mm² (L/N) and 2.5 mm² (PE)		by wires :1.5 mm² (L/N)
Voltage/operating indicator		Green Led ON		
Disconnection indicator		Disconnection		
Failsafe behavior		Led green OFF and AC network cut-off		
Remote signaling of disconnection		none		
Mounting		wall or plate		
Operating temperature		-40/+85°C		
Protection rating		IP67		
Housing material		Thermoplastic UL94-V0		
Standards compliance		EN 61643-11 / IEC 61643-11 / UL1449 4ed		
Part number		711214	711294	711217

Surge Protector for LED lighting system
DSLP and DLPM series

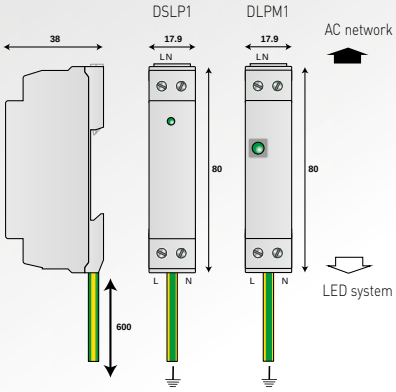

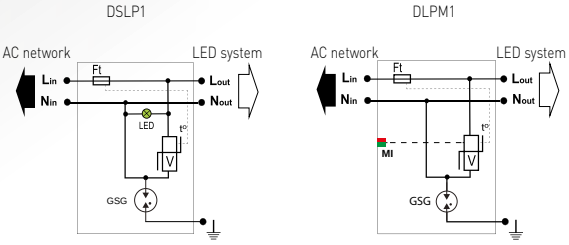

V: Varistor
Ft: Thermal fuse
LED: Disconnection indicator
MI: Mechanical disconnection indicator
t°: Thermal system disconnection
GSG: Specific Gas Tube

- **Type 2 (or 3) surge protectors for Led**
- **Very compact (low profile)**
- **Mechanical status indicator: DLPM**
- **DIN rail mounting**
- **Screw terminal connection**
- **Status indicator**
- **Disconnection AC end of life**
- **IEC 61643-11 and EN 61643-11 compliance**

Characteristics

CITEL Model		DSLP1-230L	DSLP1-120L	DLPM1-230L	DLPM1-120L
Description		Surge protectors for LED lighting system Class 1			
Network		220-240 V single phase	120 V single phase	220-240 V single phase	120 V single phase
AC system		TT/TN	TT/TN	TT/TN	TT/TN
Protection mode(s)		CM/DM	CM/DM	CM/DM	CM/DM
Max. AC operating voltage	Uc	320 Vac	150 Vac	320 Vac	150 Vac
Max. Load current	IL	10 A	10 A	10 A	10 A
Residual current - *Leakage current at Uc*	Ipe	none	none	none	none
Temporary Over Voltage (TOV) Charasteristics - 5 sec.	UT	335 Vac withstand	180 Vac withstand	335 Vac withstand	180 Vac withstand
Temporary Over Voltage (TOV) Charasteristics - 120 mn	UT	440 Vac disconnection	230 Vac disconnection	440 Vac disconnection	230 Vac disconnection
Temporary Over Voltage N/PE (TOV HT)	UT	1200 V/300A/200 ms disconnection	1200 V/300A/200 ms disconnection	1200 V/300A/200 ms disconnection	1200 V/300A/200 ms disconnection
Nominal discharge current - *15 x 8/20 µs impulses*	In	5 kA	5 kA	5 kA	5 kA
Max. discharge current -*max. withstand @ 8/20 µs by pole*	Imax	10 kA	10 kA	10 kA	10 kA
Total lightning current - *max. total withstand @ 8/20 µs*	Itotal	20 kA	20 kA	20 kA	20 kA
Withstand on Combination waveform - *Class III test*	Uoc	10 kV / 5 kA	10 kV / 5 kA	10 kV / 5 kA	10 kV / 5 kA
Withstand on overvoltages IEEE C62.41.1		10 kV/10 kA	10 kV/10 kA	10 kV/10 kA	10 kV/10 kA
Protection level CM/DM *@In (8/20µs) and @ 6kV (1.2/50µs)*	Up	1.5 kV/ 1.5 kV	1.5 kV/ 0.7 kV	1.5 kV/ 1.5 kV	1.5 kV/ 0.7 kV
Admissible short-circuit current	Isccr	10000 A	10000 A	10000 A	10000 A
Associated disconnectors					
Thermal disconnector		internal			
Installation ground fault breaker		Type «S» or delayed			
Mechnical characteristics					
Dimensions		see diagram			
Connection to Network		Screw terminal 2.5 mm² max. Earthing conductor 2 mm² - length 60 cm			
Voltage/operating indicator		Led green ON		Green indicator	
Disconnection indicator		Disconnection and AC line cut-off		Red indicator and AC line disconection	
Failsafe behavior		Led green OFF and AC network cut-off		SPD disconnection from AC line	
Remote signaling of disconnection		none			
Mounting		Symmetrical rail 35mm (EN60715)			
Operating temperature		-40/+85°C			
Protection rating		IP20			
Housing material		Thermoplastic UL94-V0			
Standards compliance		EN 61643-11 / IEC 61643-11			
Part number		352913	352912	355913	-

CM/DM : Common Mode / Differential Mode

CE

Surge Protector for LED lighting system
DS98L series

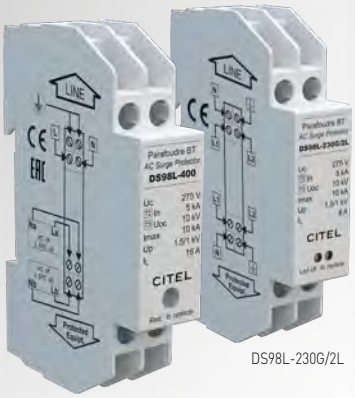

DS98L-230G/2L

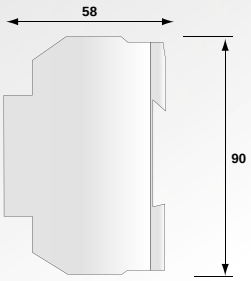

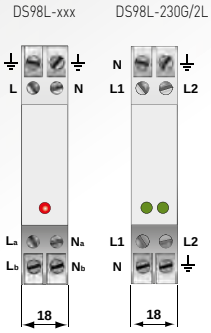

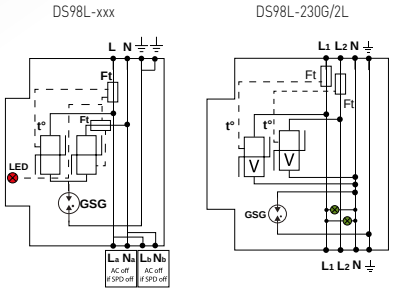

V : MOV
GSG : Specific Gas tube
Ft : Thermal fuse
t° : Thermal disconnection mechanism
LED : Disconnector indicator

- **Cost effective Single phase or 2-phase+N Surge Protector**
- **Type 2 (or 3) monobloc**
- **In: 5 kA**
- **Imax: 10 kA**
- **Safety disconnection line**
- **Double connection output**
- **Common/Differential mode**
- **IEC 61643-11 and EN 61643-11 compliance**

Characteristics

CITEL Model		DS98L-400	DS98L-120	DS98L-230G/2L
Description		Compact single-phase type 2 (or 3) surge protector - 230 V - Monobloc	Compact single-phase type 2 (or 3) surge protector - 120 V - Monobloc	Compact 2-phase+N Type 2 (or 3) surge protector - 230 V - Monobloc
Network		230 V single phase	120 V single phase	230 V 2-phase + N
Protection mode		CM/DM	CM/DM	CM/DM
AC system		TN	TN	TT-TN
Max. AC operating voltage	Uc	275 Vac	150 Vac	275 Vac
Temporary Over Voltage (TOV) Charasteristics - *5 sec.*	UT	335 Vac withstand	180 Vac withstand	335 Vac withstand
Temporary Over Voltage (TOV) Charasteristics - *120 mn*	UT	440 Vac disconnection	230 Vac disconnection	440 Vac disconnection
Residual current - *Leakage current at Uc*	Ipe	None	None	None
Max. Load current	IL	16 A	16 A	8 A
Nominal discharge current - *15 x 8/20 µs impulses*	In	5 kA	5 kA	5 kA
Max. discharge current - *max. withstand @ 8/20 µs by pole*	Imax	10 kA	10 kA	10 kA
Total lightning current - *max. total withstand @ 8/20 µs*	Itotal	20 kA	20 kA	20 kA
Withstand on Combination waveform - *Class III test*	Uoc	10 kV	10 kV	10 kA
Protection level CM/DM *@In (8/20µs) and @ 6kV (1.2/50µs)*	Up	1.5 kV/ 1 kV	0.7 kV/ 0.7 kV	1.5 kV / 1 kV
Admissible short-circuit current	Isccr	10000 A	10000 A	10000 A
Associated disconnectors				
Thermal disconnector		internal		
Fuses		Fuses type gG - 20A		
Installation ground fault breaker		Type «S» or delayed		
Mechnical characteristics				
Dimensions		see diagram		
Connection to Network		by screw terminals: 2.5 mm² max.		
Failsafe behavior		Disconnection		Disconnection
Disconnection indicator		Red light on and AC network cut-off		Green lights off and and AC cut-off
Remote signaling of disconnection		No		No
Mounting		Symmetrical rail 35 mm (EN60715)		
Operating temperature		-40/+85°C		
Protection rating		IP20		
Housing material		Thermoplastic UL94-V0		
Standards compliance		IEC 61643-11 / EN 61643-11 / UL1449 ed.4		
Certification		EAC		
Part number		3519011	3519012	351933

CM/DM: Common Mode / Differential Mode

CITEL

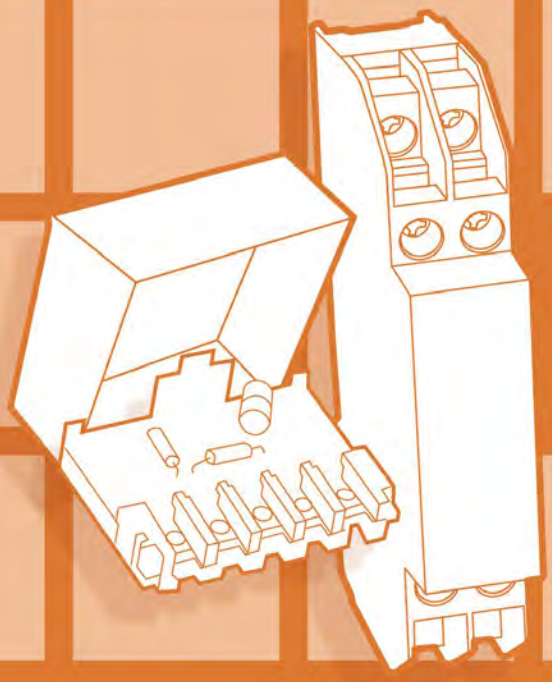

TELEPHONE LINE

Surge protectors

Telephone-Data surge protectors

Introduction

Telecommunication and data transmission devices (PBX, modems, data terminals etc..) are becoming increasingly vulnerable to lightning-induced voltage surges.
These devices are becoming more complex, sensitive and share a common grounding connection with other networks. This situation increases the risk for these sensitive devices to be stressed by destructive surge voltages, induced by lightning or by electrical switching operations.
Moreover, these devices are nowadays installed at every level of every installation (industrial, commercial and residential buildings), making these possible disturbances unacceptable and/or costly.
To make this telecom or data equipment sufficiently reliable, the installation of a dedicated surge protector, against transient overvoltages, is highly recommended.

Surge protectors for telecom and data transmission terminals could be divided in 3 types :

- Surge protectors for telecom networks
- Surge protectors for industrial networks
- Surge protectors for Local Area Networks (LANs)

CITEL products differ by their electrical diagrams and their mechanical configurations, adapted to the need of each type of network.

Reminder:
Devices connected to telecom or data networks, are also connected to the AC distribution network : in order to ensure a coordinated protection, surge protectors must be installed on each inter-connected networks.

Technology of surge protectors

All Citel telephone and data line surge protectors are based on reliable multistage hybrid design that combines a high discharge current capacity with fast response time.
All Citel telephone and data line surge protectors use a combination of a 3-electrode gas discharge tube and fast clamping diodes, in order to provide:

- A nominal discharge current (repeated without destruction) greater than 5 kA @ 8/20 µs impulse
- An ultrafast response time < 1 ns
- Safety operation in end of life
  (Fail-safe behaviour) (end of life Mode 2 following EN 61643-21)
- Low insertion losses to not disturb the transmission signal.

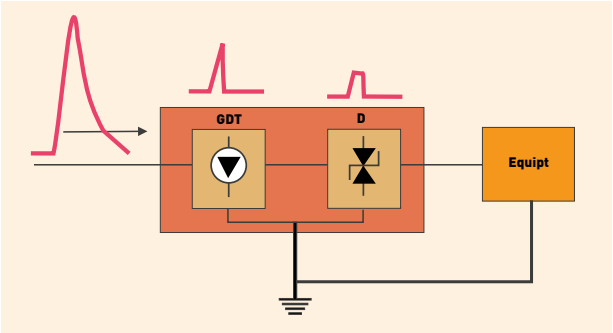

The systematic use of 3-electrode discharge tubes provides optimum protection through simultaneous sparkover.
This set of characteristics is essential for optimum reliability of the protected equipment whatever the incident or disturbance.
Various protection diagrams are available according to requirements and the type of network to be protected:

- Standard protection, used mainly for the analog telecom network (PSTN)
- Enhanced protection, for very low voltage transmission lines.
- Line+Shield Protection : Transmission and protection for the shield wire.
- «K20» protection complying with the ITU-T K20 International recommendation
- «Low capacitance» protection for high bit rate links (> 1 Mbit/s)
- «Cat 5» or «Cat 6» surge protection : designed for very high bitrate LAN (up to 10 Gbit/s).

See list of diagrams, page 98.

Standards

Tests procedures and installation recommendations for communication line surge protectors must comply the following standards:
International:
- IEC 61643-21 : Tests of surge protectors for communication lines.
- IEC 61643-22 : Choice/installation of surge protectors for communication lines.

France:
- NF EN 61643-21 : Essais applicables aux parafoudres de communication.
- Guide UTE C 15-443 : Choice/installation of surge protectors

Specific tests following EN 61643-21 standard:
Surge protectors for communication lines must be tested following various categories in order to declare their impulse durability :
- C2 Category : 10 x 8/20µs current impulses from 1 to 5 kA
- C3 Category: 300 x 10/1000µs current impulses from 10 to 100 A
- D1 Category: 2 x 10/350µs current impulses from 0.5 to 2.5 kA

Moreover, fault modes on AC or impulse stress must be tested and declared :
- Mode 1 : disconnected SPD but line transmission still active
- Mode 2 : short-circuited SPD, so line transmission off.
- Mode 3 : Failed SPD and line transmission off (in-line cutoff).

Use of surge protectors

In areas where standards are lacking or non-existent, the decision to use surge protectors on telecom and data lines can be taken by the following:

• the recommendation of the equipment manufacturer
• preventative action following equipment damage due to transients
a simplified risk assessment

Risk assessment
In order to assess quickly the probability of the lightning surges and theirs consequences, a simplified risk analysis could be performed following the table below.

Parameters	Low Risk	High Risk
Lightning density (Ng)	*< 2,5*	*> 2,5*
Site configuration	*Single building*	*Multiple buildings*
Transmission length	*Short*	*Long*
External lines distribution	*Underground*	*Overhead*
Electrical disturbances	*Low*	*High*
Existing lightning rod	*No*	*Yes*
Lightning events	*Never*	*Already*
Equipment sensitivity	*Low*	*High*
Equipment costs	*Low*	*High*
Downtime costs	*Low or acceptable*	*Expensive or unacceptable*

The level of recommendation (from «no recommendation» to «highly recommended») of using surge protectors increase with the number of parameters classified as «high risk» on the table.
A more detailed risk analysis is available on the IEC 61643-22 standard.

Surge Protection parameters

In choosing surge protection for your installation, bear the following in mind :
- The type of line : There is an appropriate level of protection and protection diagram for each type of line.
- The site configuration: Number of lines to be protected.
- The requested type of installation :

The CITEL line provides the following possibilities :
- Installation in wall-mounted box, plug mounting, on distribution frame
- various types of connection (screw, spring contact, connectors...)

- Features

Some surge protectors are equipped with pluggable modules (E280, DLA).

Installation

To be effective, surge protectors must be installed in accordance with the following principles :
- The earth point of the surge protector and of the protected equipment must be interconnected.
- The protection is installed on the network entrance, to divert impulse currents as fast as possible.
- The protected equipment must be nearby (protector/equipment distance less than 10 m long). If this rule cannot be followed, «secondary» protection must be installed near the equipment (coordinated surge protection).
- The grounding conductor (between the earth output of the SPD and the installation bonding circuit) must be as short as possible (less than 0.50 m) and have a cross-sectional area of at least 2.5 mm².
- The earth resistance must comply with the standards in force (no special earthing requested).
- Protected and unprotected cables must be kept well apart to limit coupling.

Maintenance

CITEL data line surge protectors require no maintenance or replacement. They are designed to withstand repeated and heavy impulse currents without damage.
Nevertheless a controlled fail-safe mode (short circuit to earth) is planned in case of surges exceeding the parameters of the surge protectors:

Protective short-circuit occurs in the following cases :
- Prolonged contact of a low current line with a power line (AC overstress test with alternating current, in accordance with EN 61643-21)
- Exceptionally violent «lightning» strike (impulse overstress test in accordance with EN 61643-21).

In these cases, the surge protector definitively short-circuits, which indicates to the user the functional destruction through a transmission cut, while protecting the terminal equipment (Mode 2 default in accordance with EN 61643-21).The specific version DLAS provides a different failure mode : opening the line and switching a indicator in the front face of SPD.
In all these cases, to reactive the line, the user must replace the surge protector or or replace the removable module for pluggable versions.
The basic parameters of the surge protector for datalines could be controlled with dedicated testers.

Special condition : Lightning rod

If the installation to be protected is equipped with LPS (lightning rod), the surge protectors for telecom or datalines, connected on external lines must be able to conduct 10/350 µs surge current with a rating up to 2.5 kA minimum (D1 category test in IEC 61643-21 standard).

Telephone-Data surge protectors

Protecting telecommunication equipment

Telecom devices (PBX, Modems, Terminals..) are especially exposed to lightning surges. CITEL offers a range of surge protectors dedicated to the protecting of these types of telecommunication networks :

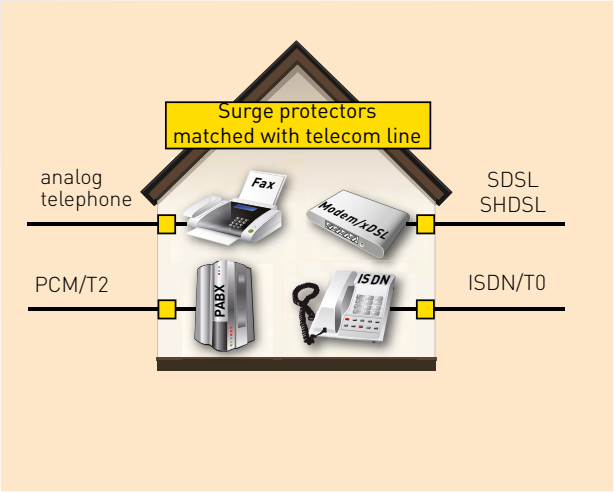

For each type of telecom line, an adapted protection scheme must be used:

Lines	Voltage		Diagram
	Nominal	Residual	
Switched telephone /ADSL	170 V	210 V	Standard protection
ISDN, T0 primary access	48 V	70 V	Enhanced protection
ISDN, T2 primary access	6 V	25 V	Enhanced Protection Low capacitance
SDSL, SHDSL	170 V	210 V	Enhanced protection

The decision whether or not to use surge protection would be determined by taking a simplified risk assessment (see «Risk analysis» paragraph), or by detailed risk assessment (as the one included in IEC 61643-22 standard), or by specific installation conditions as :

Conditions	Recommendation
External telecom lines	Systematic protection
Lines downstream PBX	Protection in long or inter-building lines
Existing AC surge protector	Systematic protection

CITEL range

Surge protectors for telecom networks are designed to fit into existing installations. So, CITEL surge protectors are available with many different mounting options:

- Mounting on telecom MDF
- Mounting on DIN rail
- Insertion in connection strips
- Wall mounting
- Plug-in on termination outlets

B180 - B280 - B480	Wall mounting Screw connection 1 to 4 pairs
MJ6 - MJ8	RJ11 or RJ45 1 to 4 pairs
DLC - DLA - DLU	DIN mounting Screw or spring connection 1 or 2 pairs Pluggable (opt.)
E280	DIN mounting or connector strip Multipairs Plug-in module Screw connection

Protecting industrial networks

Industrial installations, businesses or smart buildings are packed with an increasing quantity of control equipment, measurement, control and supervisory equipment.
These systems are built with controller cards, probes, sensors and various sensitive electronic components: downtime on the operation on this equipment can be costy.

Thus, it is increasingly vital to guarantee a relevant level of reliability to these systems: this can be obtained by installing dataline surge protection.

Equipment to be protected

Industrial or business installations are equipped with many different types of sensitive terminals, which must be protected against transient voltages, such as:

- Industrial process equipment
- SCADA systems (Supervisory Control And Data Acquisition)
- Transmission systems
- I/O cards
- Interfaces, converters
- Probes
- Actuators
- Access control system
- Fire detection system, Displays

Many data transmissions (or fieldbus) exist on the market. The table below provides relevant CITEL surge protector model (DLA series : Din rail pluggable module, and DLU series : Din rail monobloc module) in relation to the type of data transmission.

CITEL range

CITEL surge protectors for industrial data networks are designed to fit on symmetrical DIN rail.In order to offer a large range of solutions, the surge protectors are available in various configurations :

- Number of protected wires : from 1 wire to 2 pairs.
- Transmission and protection of the shield wire
- Compactness (DLC)
- Plug-in modules : Fixed version (DLU, DLU2) or Version with removable module (DLA, DLA2) to ease the maintenance process.

DLA - DLA2 - DLAS		**Pluggable** **1 or 2 pairs** **Screw connection** **Imax 20 kA**
DLU - DLU2		**Monobloc** **1 or 2 pairs** **Screw connection** **Imax 20 kA**
DLC		**Compact** **Monobloc** **1 pair** **Spring connection** **Imax 10 kA**

Network	*Wiring*	*DLC*	*DLU*	*DLA*
4-20 mA	*1 pair*	*DLC-24D3*	*DLU-24D3*	*DLA-24D3*
Profibus-FMS	*1 pair+Shield*	*DLC-12D3*	*DLU-12D3*	*DLA-12D3*
Profibus-PA	*1 pair+Shield*	*DLC-48D3*	*DLU-48D3*	*DLA-48D3*
Profibus-DP	*1 pair+Shield*	*DLC-12DBC*	*DLU-12DBC*	*DLA-12DBC*
Interbus	*1 pair+Shield*	*DLC-12D3*	*DLU-12D3*	*DLA-12D3*
Foundation Fieldbus-H1	*1 pair+Shield*	*DLC-12D3*	*DLU-12D3*	*DLA-12D3*
Foundation Fieldbus-H2	*1 pair+Shield*	*DLC-48DBC*	*DLU-48DBC*	*DLA-48DBC*
WorldFIP	*1 pair+Shield*	*DLC-48DBC*	*DLU-48DBC*	*DLA-48DBC*
Fipway	*1 pair+Shield*	*DLC-48DBC*	*DLU-48DBC*	*DLA-48DBC*
LONworks	*1 pair+Shield*	*DLC-48DBC*	*DLU-48DBC*	*DLA-12DBC*
Batibus	*1 pair+Shield*	*DLC-12D3*	*DLU-12D3*	*DLA-12D3*
RS485	*1 pair+Shield*	*DLC-12D3*	*DLU-12D3*	*DLA-12D3*
RS422	*2 pairs*	-	*DLU2-06D3*	*DLA2-06D3*
RS232	*4 wires*	-	*DLU2-12D3*	*DLA2-12D3*

Typical diagrams (for 1 pair)

A Standard Protection

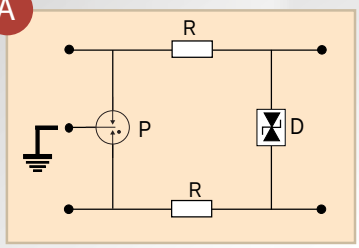

B Reinforced Protection

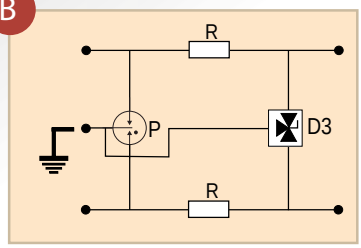

C Low capacitiance Protection

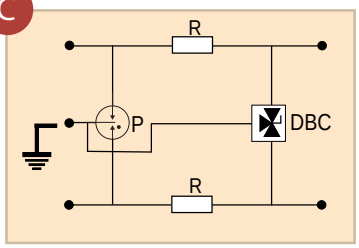

D Protection + Shield

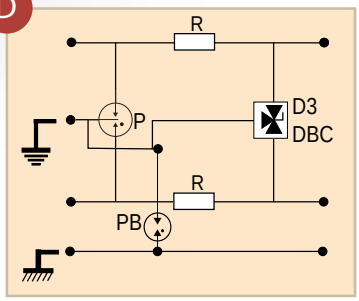

K1 «K20» type Protection

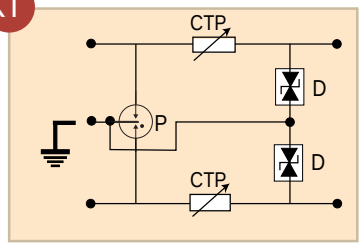

M High bit-rate Protection

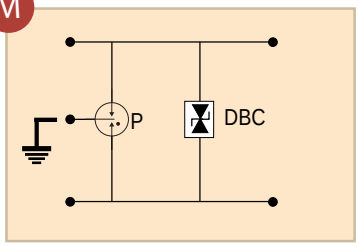

E 3-electrode GDT Protection

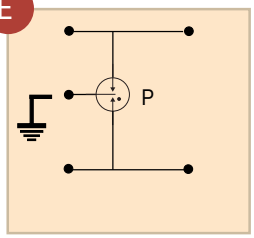

F 2-electrode GDT Protection

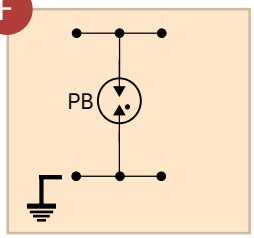

G 2-pole MOV Protection

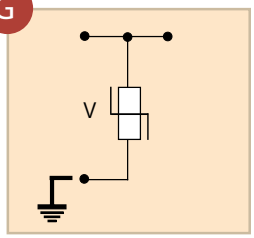

H 3-pole MOV Protection

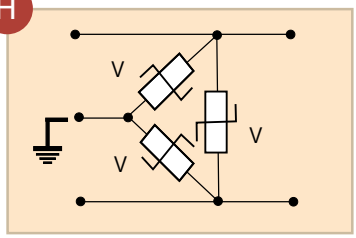

L Low capacitance 3- pole diode

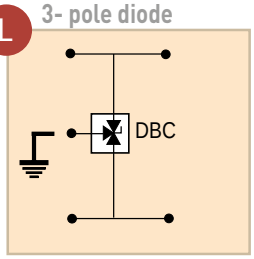

N «CAT6» Protection

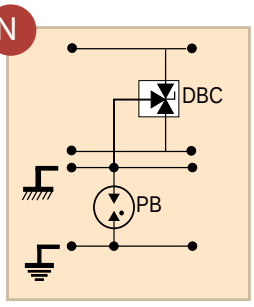

J Grounding

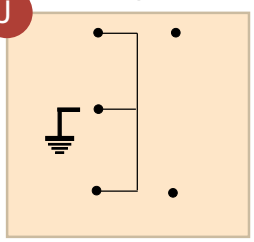

Z Line continuity

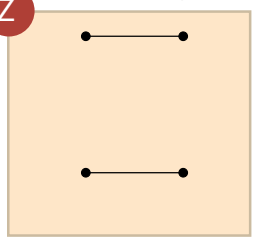

P : 3-pole gas tube
PB : 2-pole gas tube
R : Line resistor
D : Fast Clamping Diode
D3 : 3-pole Clamping Diode
DBC : Low capacitance clamping diode
V : MOV
CTP : PTC

DIN rail plug-in Surge Protector for dataline/telecom
DLA, DLA2 series

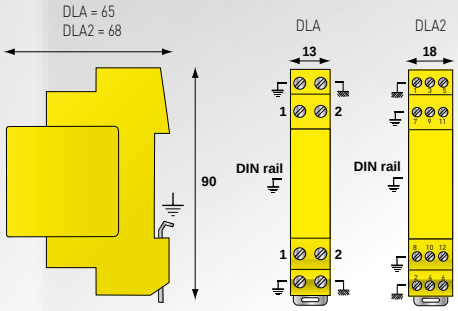

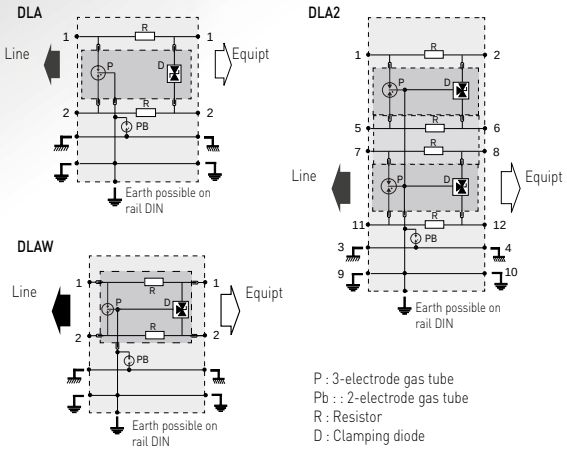

- **Pluggable surge protection for «DIN» mounting**
- **All types of Telephone and Data lines**
- **Shield wire protection**
- **Without line cut-off (DLA) or with (DLAW)**
- **2- pair version (DLA2)**
- **IEC 61643-21 compliance**
- **UL497 A approved**

DLA□□-xxx

- Bit rate (D3 or DBC)
- Nominal voltage
- « » : 1 pair
- «2» : 2 pairs
- « » : standard diagram
- «W» : line cut-off in case of removal plug-in module
- «H» : max. line current IL : 2.4 A

Characteristics

CITEL Model		DLA-170 DLA2-170	DLA-48DBC DLA2-48DBC	DLA-48D3 DLA2-48D3	DLA-24D3 DLA2-24D3	DLA-12D3 DLA2-12D3	DLA-06DBC DLA2-06DBC	DLA-06D3 DLA2-06D3
Description		Telecom/Data SPD- 1 or 2-pair -DIN mounting - Pluggable						
Network		Telephone line, ADSL2, SDSL	Fipway, WorldFIP, FieldBus-h2	ISDN-T0, 48 V line	4-20 mA	RS232, RS485	MIC/T2, 10BaseT	RS422, RS485*
SPD configuration	DLA	1-pair + shielded	1-pair + shielded	1-pair + shielded	1-pair + shielded	1-pair + shielded	1-pair + shielded	1-pair + shielded
	DLA2	2-pair + shielded	2-pair + shielded	2-pair + shielded	2-pair + shielded	2-pair + shielded	2-pair + shielded	2-pair + shielded
Nominal line voltage	Un	150 V	48 V	48 V	24 V	12 V	6 V	6 V
Max. DC operating voltage	Uc	170 V	53 V	53 V	28 V	15 V	8 V	8 V
Max. Load current	IL	300 mA	300 mA	300 mA	300 mA	300 mA	300 mA	300 mA
Max. frequency	f max	> 10 MHz	> 20 MHz	> 3 MHz	> 3 MHz	> 3 MHz	> 20 MHz	> 3 MHz
Insertion loss		< 1 dB	< 1 dB	< 1 dB	< 1 dB	< 1 dB	< 1 dB	< 1 dB
Nominal discharge current *8/20µs Test x 10 - C2 Category*	In	5 kA	5 kA	5 kA	5 kA	5 kA	5 kA	5 kA
Max. discharge current *-max. withstand @ 8/20 µs by pole*	Imax	20 kA	20 kA	20 kA	20 kA	20 kA	20 kA	20 kA
Impulse current *2 x 10/350µs Test - D1 Category*	Iimp	5 kA	5 kA	5 kA	5 kA	5 kA	5 kA	5 kA
Protection level	Up	220 V	75 V	70 V	40 V	30 V	25 V	20 V
Failsafe behavior		Short-circuit	Short-circuit	Short-circuit	Short-circuit	Short-circuit	Short-circuit	Short-circuit
Mechnical characteristics								
Dimensions		see diagram						
Format		Plug-in DIN box						
Connection to Network		screw terminal - cross section 0.4-1.5 mm²						
Disconnection indicator		transmission interrupt - Default Mode 2						
Mounting		Symmetrical rail 35 mm (EN60715)						
Operating temperature		-40/+85°C						
Protection rating		IP20						
Housing material		Thermoplastic UL94-V0						
Spare module for DLA		DLAM-170	DLAM-48DBC	DLAM-48D3	DLAM-24D3	DLAM-12D3	DLAM-06DBC	DLAM-06D3
Spare module for DLA2		DLA2M-170	DLA2M-48DBC	DLA2M-48D3	DLA2M-24D3	DLA2M-12D3	DLA2M-06DBC	DLA2M-06D3
Versions		DLA-xxx : standard version 1-pair (line continuity in case of removal of plug-in module) DLA2-xxx : standard version 2-pairs (line continuity in case of removal of plug-in module) DLAW-xxx :specific version 1-pair (line cut-off in case of removal plug-in module) DLAH-xxx : «remote supply» version 1-pair (max. line current IL = 2,4 A)						
Standards compliance		IEC 61643-21 / EN 61643-21 / UL497A						
Part number								
DLA range		6406011	640421	6403021	6403011	6402011	640121	6401011
DLAH range		641005	641014	641004	641003	641002	641011	641001
DLAW range		640805	-	640804	640803	640802	640811	640801
DLA2 range		640611	-	640312	640311	640211	640131	640111

UL LISTED

* usable on RS485 line with operating voltage < 6V

DIN rail plug-in Surge Protector for 1-pair dataline/telecom with failure indicator

DLAS series

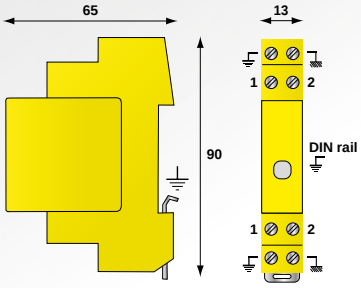

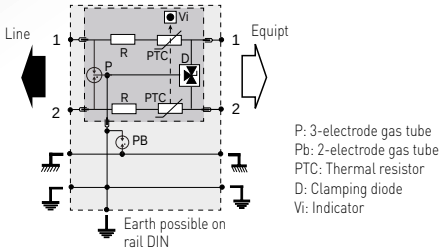

- **1-pair SPD for dataline**
- **Visual indicator in failsafe behaviour**
- **Line voltage from 6 to 48 Vdc**
- **Plugabble module**
- **DIN rail mounting , Screw terminal wirings**
- **Discharge currents Imax/In : 20 kA/ 5kA**
- **IEC/EN 61643-21 compliance**

DLAS-xxxD3

Nominal voltage

Failure indicator

Characteristics

CITEL Model		DLAS-48D3	DLAS-24D3	DLAS-12D3	DLAS-06D3
Description		Telecom/Data SPD- 1-pair -DIN mounting - Pluggable			
Network		ISDN-T0, 48 V line	4-20 mA	RS232, RS485	RS422, RS485
SPD configuration		1-pair + shielded	1-pair + shielded	1-pair + shielded	1-pair + shielded
Nominal line voltage	Un	48 V	24 V	12 V	6 V
Max. DC operating voltage	Uc	53 V	28 V	15 V	8 V
Max. Load current	IL	300 mA	300 mA	300 mA	300 mA
Max. frequency	f max	> 3 MHz	> 3 MHz	> 3 MHz	> 3 MHz
Insertion loss		< 1 dB	< 1 dB	< 1 dB	< 1 dB
Nominal discharge current - *8/20µs Test x 10 - C2 Category*	In	5 kA	5 kA	5 kA	5 kA
Max. discharge current *-max. withstand ß 8/20 µs by pole*	Imax	20 kA	20 kA	20 kA	20 kA
Impulse current - *2 x 10/350µs Test - D1 Category*	Iimp	5 kA	5 kA	5 kA	5 kA
Protection level	Up	70 V	40 V	30 V	20 V
Failsafe behavior		Opening line + indication			
Mechnical characteristics					
Dimensions		see diagram			
Format		Plug-in DIN box			
Connection to Network		screw terminal - cross section 0.4-1.5 mm²			
End of life		transmission interrupt - default mode 3			
Disconnection indicator		Red indicator			
Mounting		Symmetrical rail 35 mm (EN60715)			
Operating temperature		-40/+85°C			
Protection rating		IP20			
Housing material		Thermoplastic UL94-V0			
Spare module		DLASM-48D3	DLASM-24D3	DLASM-12D3	DLASM-06D3
Standards compliance		IEC 61643-21 / EN 61643-21 / UL497A			
Part number		641304	641303	641302	641301

DIN rail Surge Protector for dataline/telecom
DLU, DLU2 series

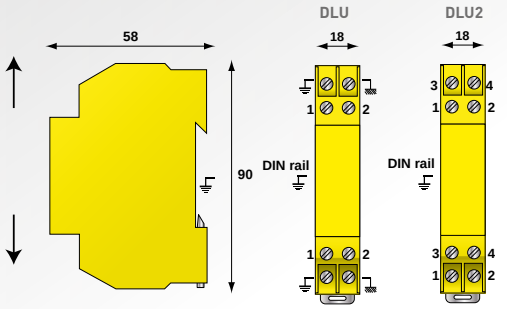

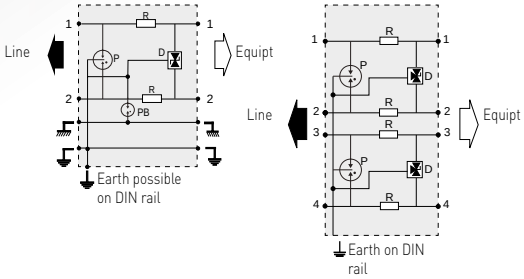

P : 3-electrode gas tube
Pb : : 2-electrode gas tube
R : Resistor (or L : inductor for DLUH version)
D : Clamping diode

- **For «DIN» rail mounting**
- **All types of Telephone and Data lines**
- **Monobloc housing**
- **2-pair version (DLU2)**
- **Transmission and protection of shield wire (DLU)**
- **IEC 61643-21 compliance**
- **UL497 A approved**

DLU□□-xxx□

- Bit rate (D3 or DBC)
- Nominal voltage
- « » : 1 pair
- «2» : 2 pairs
- « » : standard version
- «H» : max. line current IL : 2.4A

Characteristics

CITEL Model		DLU-170 DLU2-170	DLU-48DBC DLU2-48DBC	DLU-48D3 DLU2-48D3	DLU-24D3 DLU2-24D3	DLU-12D3 DLU2-12D3	DLU-06DBC DLU2-06DBC	DLU-06D3 DLU2-06D3
Description		Telecom/Data SPD- 1 or 2-pair -DIN mounting - Monobloc						
Network		Telephone line, ADSL, SDSL, SHDSL VDSL2	Fipway, WorldFIP, FieldBus-H2,	48V line, ISDN-T0, Profibus-PA	4-20mA, 24V line	Profibus-FMS, Interbus, Fiel-dBus-H1, Batibus, RS232, RS485	6V line, High bitrate, MIC/T2, 10BaseT	RS422 RS485*
SPD configuration	DLU	1-pair + shielded	1-pair + shielded	1-pair + shielded	1-pair + shielded	1-pair + shielded	1-pair + shielded	1-pair + shielded
	DLU2	2 pairs	2 pairs	2 pairs	2 pairs	2 pairs	2 pairs	2 pairs
Nominal line voltage	Un	150 V	48 V	48 V	24 V	12 V	6 V	6 V
Max. DC operating voltage	Uc	170 V	53 V	53 V	28 V	15 V	10 V	10 V
Max. Load current	IL	300 mA	300 mA	300 mA	300 mA	300 mA	300 mA	300 mA
Max. frequency	f max	> 10 MHz	> 20 MHz	> 3 MHz	> 3 MHz	> 3 MHz	> 20 MHz	> 3 MHz
Insertion loss		< 1 dB	< 1 dB	< 1 dB	< 1 dB	< 1 dB	< 1 dB	< 1 dB
Nominal discharge current *8/20µs Test x 10 - C2 Category*	In	5 kA	5 kA	5 kA	5 kA	5 kA	5 kA	5 kA
Max. discharge current -max. *withstand @ 8/20 µs by pole*	Imax	20 kA	20 kA	20 kA	20 kA	20 kA	20 kA	20 kA
Impulse current *2 x 10/350µs Test - D1 Category*	Iimp	5 kA	5 kA	5 kA	5 kA	5 kA	5 kA	5 kA
Protection level	Up	220 V	75 V	70 V	40 V	30 V	25 V	20 V
Failsafe behavior		Short-circuit	Short-circuit	Short-circuit	Short-circuit	Short-circuit	Short-circuit	Short-circuit
Mechnical characteristics								
Dimensions		see diagram						
Format		DIN box						
Connection to Network		screw terminal - cross section 0.4-1.5 mm²						
Disconnection indicator		transmission interrupt - default mode 2						
Mounting		Symmetrical rail 35 mm						
Operating temperature		-40/+85°C						
Protection rating		IP20						
Housing material		Thermoplastic UL94-V0						
Versions		DLU-xxx : version 1 pair DLU2-xxx : version 2 pairs DLUH-xxx : «remote supply» version 1-pair (max. line current IL = 2,4 A) DLUH2-xxx : «remote supply» version 2 pairs (max. line current IL = 2,4 A)						
Standards compliance		IEC 61643-21 / EN 61643-21 / UL497A						
Part number								
DLU range		640505	640514	640504	640503	640502	640511	640501
DLUH range		640705	640714	640704	640703	640702	640711	640701
DLU2 range		640405	640434	640404	640401	640403	640431	640402
DLUH2 range		-	640744	640734	640733	640732	640741	640731

UL LISTED

* usable on RS485 line with operating voltage < 6V

1-pair DIN rail Surge Protector for dataline/telecom
DLC series

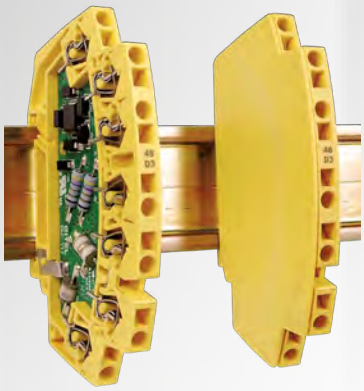

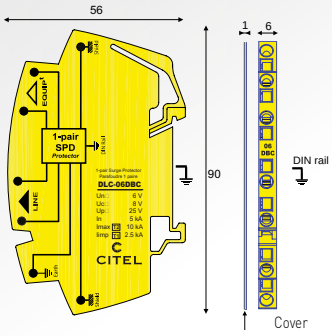

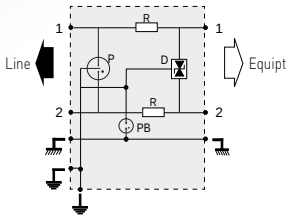

- **For «DIN» rail mounting**
- **All types of Telephone and Data lines**
- **Monobloc housing and very compact**
- **Protection of shield wire**
- **IEC 61643-21 compliance**

DLC-xxx

- Bit rate (D3 or DBC)
- Nominal voltage

Characteristics

CITEL Model		DLC-170	DLC-48DBC	DLC-48D3	DLC-24D3	DLC-12D3	DLC-06DBC	DLC-06D3
Description		1-pair monobloc Telecom surge protector						
Network		Telephone line, ADSL2, SDSL	Fipway, WorldFIP, FieldBus-H2	RNIS-T0, Line 48V	LS, 4-20mA	RS232, RS485	MIC/T2, 10BaseT	RS422 RS485*
SPD configuration		1-pair + shielded	1-pair + shielded	1-pair + shielded	1-pair + shielded	1-pair + shielded	1-pair + shielded	1-pair + shielded
Nominal line voltage	Un	150 V	48 V	48 V	24 V	12 V	6 V	6 V
Max. DC operating voltage	Uc	170 V	53 V	53 V	28 V	15 V	8 V	8 V
Max. Load current	IL	300 mA	300 mA	300 mA	300 mA	300 mA	300 mA	300 mA
Max. frequency	f max	> 10 MHz	> 20 MHz	> 3 MHz	> 3 MHz	> 3 MHz	> 20 MHz	> 3 MHz
Insertion loss		< 1 dB	< 1 dB	< 1 dB	< 1 dB	< 1 dB	< 1 dB	< 1 dB
Nominal discharge current *8/20µs Test x 10 - C2 Category*	In	5 kA	5 kA	5 kA	5 kA	5 kA	5 kA	5 kA
Max. discharge current -max. *withstand @ 8/20 µs by pole*	Imax	10 kA	10 kA	10 kA	10 kA	10 kA	10 kA	10 kA
Impulse current *2 x 10/350µs Test - D1 Category*	Iimp	2.5 kA	2.5 kA	2.5 kA	2.5 kA	2.5 kA	2.5 kA	2.5 kA
Protection level	Up	220 V	70 V	70 V	40 V	30 V	25 V	25 V
Failsafe behavior		Short-circuit	Short-circuit	Short-circuit	Short-circuit	Short-circuit	Short-circuit	Short-circuit
Mechnical characteristics								
Dimensions		see diagram						
Format		DIN box						
Connection to Network		by spring - max. cross section 1.5 mm²						
Disconnection indicator		transmission interrupt -default mode 2						
Mounting		Symmetrical rail DIN 35 mm (EN60715)						
Operating temperature		-40/+85°C						
Protection rating		IP20						
Housing material		Thermoplastic UL94-V0						
Standards compliance		IEC 61643-21 / EN 61643-21 / UL497A						
Part number		641105	641114	641104	641103	641102	641111	641101

UL LISTED

* usable on RS485 line with operating voltage < 6V

2-pair plug-in Surge Protector
E280 series

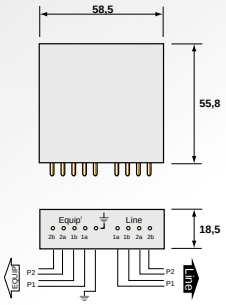

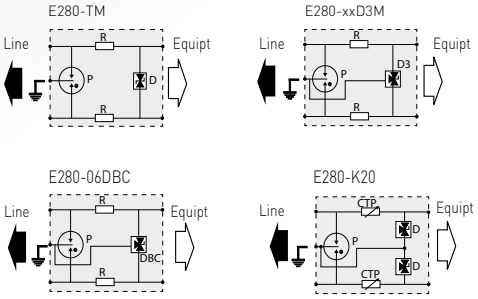

P : 3-electrode gas tube
R : Resistor
D : Clamping diode
D3 : 3-pole clamping diode
DBC : 3-pole low capacitance diode
CTP : Thermistor

- **2 pairs plug-in module**
- **Optimized modularity and maintenance**
- **Can be adapted to all types of line**
- **Gas tube / diode combination**
- **EN 61643-21 compliance**

Characteristics

CITEL Model		E280-TM	E280-K20	E280-48D3M	E280-48DBC	E280-24D3M	E280-12D3M	E280-06D3M	E280-06DBC
Description		2-pair plug-in surge protector							
Network		Telephone line, ADSL, SDSL, SHDSL	Telephone line K20 standard	ISDN-T0, 48 V line	RNIS-T0, 48 V line	LS, 4-20mA	RS232,RS485	RS422 RS485*	MIC/T2, 10BaseT
Nominal line voltage	Un	150 V	150 V	48 V	48 V	24 V	12 V	6 V	6 V
Max. DC operating voltage	Uc	170 V	190 V	53 V	53 V	28 V	15 V	8 V	8 V
Max. Load current	IL	300 mA	150 mA	300 mA	300 mA	300 mA	300 mA	300 mA	300 mA
Max. frequency	f max	10 MHz	3 Mhz	3 MHz	20 MHz	3 MHz	3 MHz	3 MHz	20 MHz
Insertion loss		< 1 dB	< 1 dB	< 1 dB	< 1 dB	< 1 dB	< 1 dB	< 1 dB	< 1 dB
Nominal discharge current *8/20µs Test x 10 - C2 Category*	In	5 kA	5 kA	5 kA	5 kA	5 kA	5 kA	5 kA	5 kA
Max. discharge current -max. *withstand @ 8/20 µs by pole*	Imax	10 kA	10 kA	10 kA	10 kA	10 kA	10 kA	10 kA	10 kA
Impulse current *2 x 10/350µs Test - D1 Category*	Iimp	2.5 kA	2.5 kA	2.5 kA	2.5 kA	2.5 kA	2.5 kA	2.5 kA	2.5 kA
Protection level	Up	220 V	260 V	70 V	75 V	40 V	30 V	20 V	25 V
Failsafe behavior		Short-circuit	Short-circuit	Short-circuit	Short-circuit	Short-circuit	Short-circuit	Short-circuit	Short-circuit
Mechanical characteristics									
Dimensions		see diagram							
Format		plug-in modul on support							
Disconnection indicator		transmission interrupt - default mode 2							
Mounting		on support type BN, FPSU, MMP							
Operating temperature		-40/+85°C							
Protection rating		IP20							
Housing material		Thermoplastic UL94-V0							
Standards compliance		IEC 61643-21 / EN 61643-21 / UL497A							
Certification		UL listed							
Part number		71186	71192	71184	71174	71183	71182	71181	71171

UL LISTED

* usable on RS485 line with operating voltage < 6V

Support for E280 plug-in modules
BN , FPSU , MMP

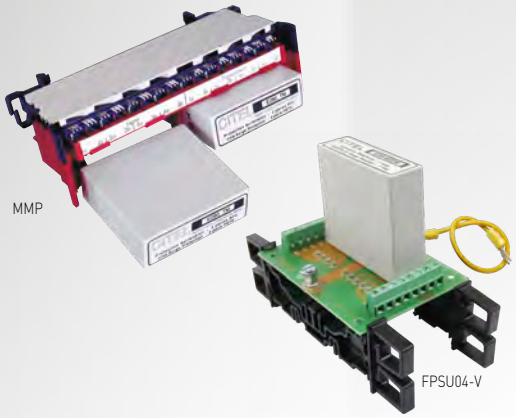

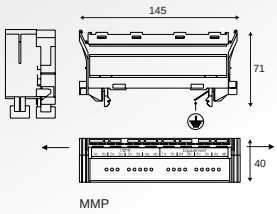

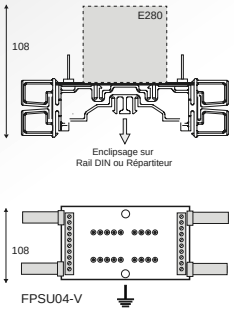

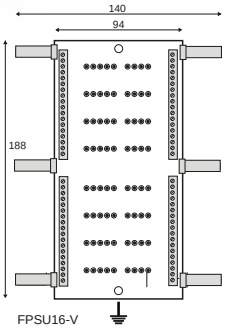

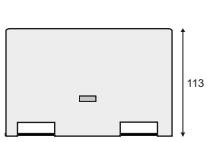

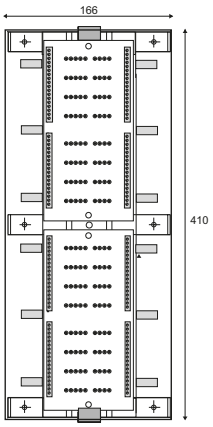

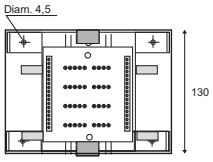

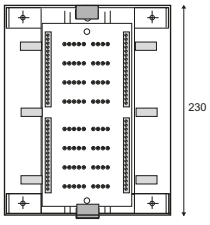

- **Support for E280 plug-in modules**
- **BN series : metal enclosures for 8, 16 or 32 pairs**
- **FPSU series : MDF or DIN rail mounting for 4 or 16 pairs**
- **FP series : Wall mounting plate for 10 or 25 pairs**
- **MMP module : Connector strip for 4 pairs**

Characteristics

CITEL Model		BN08-V	BN16-V	BN32-V	FPSU04-V	FPSU16-V	FP10-QC	FP25-QC	MMP
Description		Support for E280 plug-in modules	Support for E280 plug-in modules	Support for E280 plug-in modules	Support for E280 plug-in modules	Support for E280 plug-in modules	Support for E280 plug-in modules	Support for E280 plug-in modules	Support for E280 plug-in modules
SPD configuration		8 pairs max	16 pairs max	32 pairs max	4 pairs max	16 pairs max	10 pairs max	25 pairs max	4 pairs max
Max. number of E280s		4	8	16	2	8	5	13	2
Max. Load current	IL	10 A	10 A	10 A	10 A	10 A	10 A	10 A	5 A
Max. frequency	f max	20 MHz	20 MHz	20 MHz	20 MHz	20 MHz	20 MHz	20 MHz	20 MHz
Insertion loss		< 1 dB	< 1 dB	< 1 dB	< 1 dB	< 1 dB	< 1 dB	< 1 dB	< 1 dB
Nominal discharge current *8/20µs Test x 10 - C2 Category*	In	5 kA	5 kA	5 kA	5 kA	5 kA	5 kA	5 kA	5 kA
Max. discharge current -max. *withstand I3 8/20 µs by pole*	Imax	10 kA	10 kA	10 kA	10 kA	10 kA	10 kA	10 kA	10 kA
Impulse current *2 x 10/350µs Test - D1 Category*	Iimp	2.5 kA	2.5 kA	2.5 kA	2.5 kA	2.5 kA	2.5 kA	2.5 kA	2.5 kA
Mechnical characteristics									
Dimensions		see diagram							
Connexion		screw terminal - max. section 1,5 mm²			Screw terminal - section max. 1,5 mm²		connector QC 66		connector CAD
Mounting		Wall			MDF Din rail		Wall		MDF
Operating temperature		-40/+85°C			-40/+85°C		-40/+85°C		-40/+85°C
Protection rating		IP20			IP20		IP20		IP20
Housing material		Metal			-		-		Thermoplastic UL94-V0
Part number		71347	71356	71377	71442	71472	71435	71475	71480

*) Compatible with MDF profile : PA015001 (Infra+), HPU (3M-Pouyet), 09649 (Alcatel) and CITEL profile

1,2 and 4-pair Surge Protectors
B180, B280, B480 series

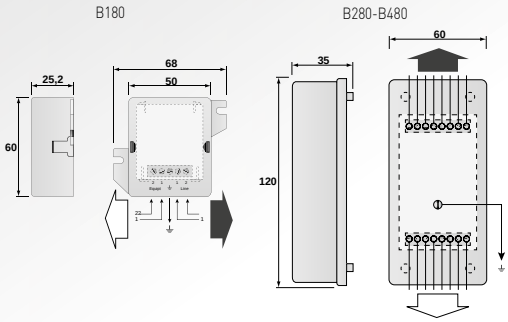

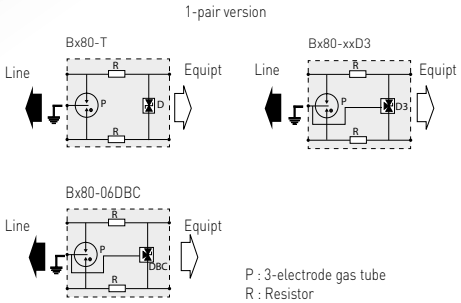

- **1 to 4-pair surge protection units**
- **All types of telephone and data lines**
- **Removable protection circuit**
- **Wall mounting and screw connection**
- **IEC 61643-21 compliance**
- **UL497 A**

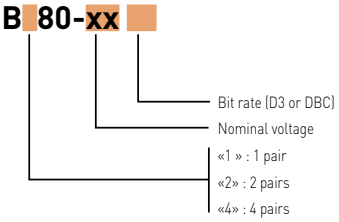

Characteristics

CITEL Model		B180-T B280-T B480-T	B180-48D3 B280-48D3 B480-48D3	B180-48DBC B280-48DBC B480-48DBC	B180-24D3 B280-24D3 B480-24D3	B180-12D3 B280-12D3 B280-12D3	B180-06D3 B280-06D3 B480-06D3	- B280-06DBC B480-06DBC
Description		Surge protector box - 1, 2 or 4 pairs						
Network		Tephone line, ADSL, SDSL, SHDSL	ISDN-T0, 48 V line	RNIS-T0, 48 V line	LS, 4-20 mA	RS232, RS485	RS422 RS485*	MIC/T2, 10BaseT
SPD configuration	B180	1 pair	1 pair	1 pair	1 pair	1 pair	1 pair	-
	B280	2 pairs	2 pairs	2 pairs	2 pairs	2 pairs	2 pairs	2 pairs
	B480	4 pairs	4 pairs	4 pairs	4 pairs	2 pairs	4 pairs	4 pairs
Nominal line voltage	Un	150 V	48 V	48 V	24 V	12 V	6 V	6 V
Max. DC operating voltage	Uc	170 V	53 V	53 V	28 V	15 V	8 V	8 V
Max. Load current	IL	300 mA	300 mA	300 mA	300 mA	300 mA	300 mA	300 mA
Max. frequency	f max	10 MHz	3 MHz	20 MHz	3 MHz	3 MHz	3 MHz	20 MHz
Insertion loss		< 1 dB	< 1 dB	< 1 dB	< 1 dB	< 1 dB	< 1 dB	< 1 dB
Nominal discharge current *8/20µs Test x 10 - C2 Category*	In	5 kA	5 kA	5 kA	5 kA	5 kA	5 kA	5 kA
Max. discharge current *max. withstand ld 8/20 µs by pole*	Imax	20 kA	20 kA	20 kA	20 kA	20 kA	20 kA	20 kA
Impulse current *2 x 10/350µs Test - D1 Category*	Iimp	2.5 kA	2.5 kA	2.5 kA	2.5 kA	2.5 kA	2.5 kA	2.5 kA
Protection level	Up	220 V	70 V	75 V	40 V	30 V	20 V	25 V
Failsafe behavior		Short-circuit	Short-circuit	Short-circuit	Short-circuit	Short-circuit	Short-circuit	Short-circuit
Mechnical characteristics								
Dimensions		see diagram						
Format		wall mounting box						
Disconnection indicator		transmission interrupt - default mode 2						
Mounting		wall (screws non included)						
Operating temperature		-40/+85°C						
Protection rating		IP20						
Housing material		Thermoplastic UL94-V0						
Spare unit		S180-T	S180-48D3	S180-48DBC	S180-24D3	S180-12D3	S180-06D3	-
Spare unit		S280-T	S280-48D3	S280-48DBC	S280-24D3	S280-12D3	S280-06D3	S280-06DBC
Spare unit		S480-T	S480-48D3	S480-48DBC	S480-24D3	S280-12D3	S480-06D3	S480-06DBC
Standards compliance		IEC 61643-21 / EN 61643-21 / UL497A						
Certification		UL listed						
Part number								
B180 range		510602	510402	510412	510302	510202	510102	-
B280 range		72726	72774	72754	72773	72772	72771	72751
B480 range		72746	72794	72800	72793	72772	72791	72798

LISTED

* usable on RS485 line with operating voltage < 6V

Telecom Surge Protectors
MJ8, MJ6-1T

MJ6-1T

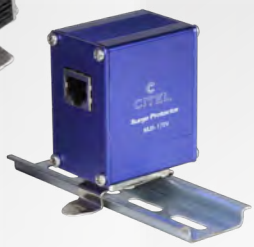

MJ8-170V

MJ6-1T

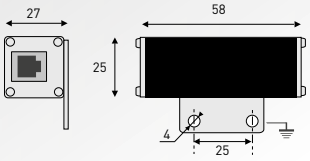

MJ8

Mounting Flange Rail DIN mounting Screw lug

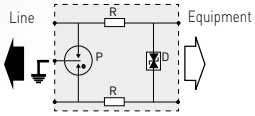

P : 3-pole gas tube
R : Resistor
D : Clamping Diode

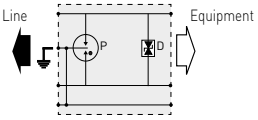

- **Protection for one telephone line**
- **For PSTN, ISDN, ADSL lines**
- **Quick installation**
- **RJ11 or RJ45 connectors**
- **IEC 61643-21 compliance**
- **UL497A**

Characteristics

CITEL Model		MJ6-1T	MJ8-ISDN	MJ8-170V
Description		RJ11 surge protector for 1 telephone line	RJ45 surge protector for 1 ISDN line	Surge protector for telephone line 1 to 4-pairs
Network		RTC, ADSL2, SDSL, 1 pair	ISDN	RTC, ADSL2, SDSL, SHDSL, VDSL2 - 4 pairs
Max. data rate		30 Mbps	30 Mbps	30 Mbps
SPD configuration		1-pair + shielded	2 pairs + shielded	4 pairs + shielded
Pin outs		1-pair (3-4)	2-pairs (3-6)(4-5)	4-pairs (1-2)(3-6)(4-5)(7-8)
Nominal line voltage	Un	150 V	48 Vdc	150 Vdc
Max. DC operating voltage	Uc	170 Vdc	60 Vdc	170 Vdc
Max. Load current *(if connection serie)*	IL	300 mA	1000 mA	1000 mA
Max. frequency	f max	10 MHz	10 MHz	10 MHz
Insertion loss		< 1 dB	< 1 dB	< 1 dB
Line/Ground Nominal discharge current *8/20µs Test x 10 - C2 category*	In	2500 A	2000 A	2000 A
Nominal discharge current Line/Line *8/20µs Test x 10 - C2 category*	In	2500 A	500 A	500 A
Impulse current - *2 x 10/350µs Test - D1 Category*	Iimp	500 A	500 A	500 A
Protection level	Up	220 V	70 V	220 V
Failsafe behavior		Short-circuit	Short-circuit	Short-circuit
Mechnical characteristics				
Dimensions		see diagram		
Format		RJ11 Connector	RJ45 connector	
Connection to Network		RJ11 connector female input/output	RJ45 connector female input/output	
Disconnection indicator		transmission interrupt - default mode 2		
Mounting		Mounting flange,Screw lug	Mounting flange,Screw lug, DIN Rail	
Operating temperature		-40/+85°C		
Protection rating		IP20		
Housing material		Aluminium		
Standards compliance		IEC 61643-21 / EN 61643-21 / UL497A		
Part number		560402	560209	560203

UL LISTED

CITEL

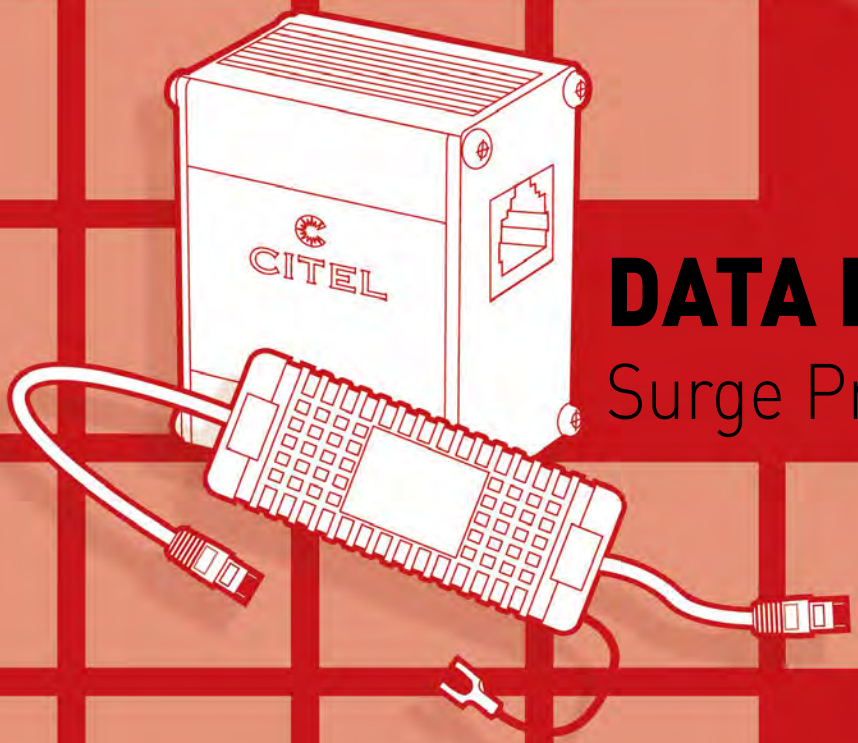

DATA LINE

Surge Protectors

Data Surge Protectors

Protecting data-processing networks

For industrials sites or secondary buildings integrating a linked computer network, any single issue at one of these systems will create consequences, more or less,to the safety and productivity of the entire system.
It is now more and more crucial to reinforce the level of reliability for these systems: this can be achieved by using a proper surge protection strategy for these sensitive networks.
As is the case in telecom or industrial networks, the installation of surge protectors on data-processing networks is necessary, especially in the following cases :

- Inter-building networks
- Wide networks
- High Electromagnetic disturbance density

As for the other types of transmission lines, CITEL surge protectors for Local Area Networks (LANs) are based an association 3-pole gas tubes and fast clamping diodes to ensure efficiency on lightning surges. In addition, two additional parameters need to be taken into account: the voltage level of the application and the data transmission speed. CITEL surge protectors for data-processing networks are designed for both of these requirements.

Performances

Ethernet network surge protectors are designed for computer networks with very fast data transfer speeds up to 10 Gbit/s for the Category 6 networks. In order to cover the many various types of networking applications, CITEL offers a complete range of surge protectors adapted to the most important networks.

Standard

Surge protectors for data network are in compliance with IEC 61643-21.

CITEL range

CITEL Surge protector for video transmission can be adapted to the different configurations. These are generally equipped with the network connection (RJ45) and available either in an individual box for the protection of an isolated terminal, or in a 19'' Rack version for multi-line protection at hub or server level.

Surge Protectors for terminal equipment

CITEL offers several configurations depending on the types of network and the performance protection required:

- the **MJ8-CAT6S** are dedicated to the Category 6 and 5E networks with shielded cable (STP). Their GDT/Diodes circuit gives them the discharge capacity necessary for the protection of inter-building connections.

- the **MJ8-POE** are designed to protect indoor equipment connected to PoE networks (A or B configuration).

- Les **CMJ8-POE** are designed to protect outdoor equipment connected to PoE networks.

Transmission curves *(MJ8-CAT6 S)*

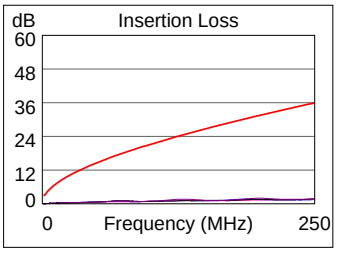

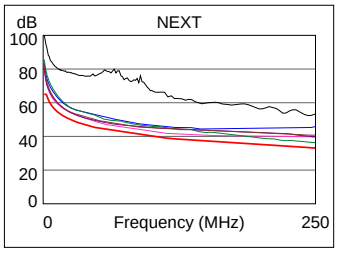

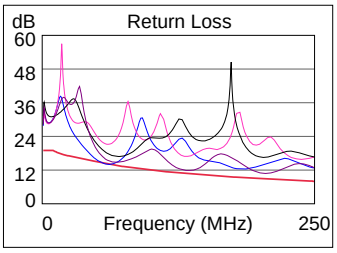

Multi-port surge protectors 19" Rack format

CITEL offers several configurations depending on the types of network and the protection performance required:

- ***Gamme PL***

  Available in 24 and 12 ports. Category 6 compatible. Shielded RJ45 input/output. STP cabling. GDT/diodes diagram.

- ***Gamme RAK***

  Available in 32 and 16 ports. Category 6, PoE and coaxial BNC connection versions. Input/output by connectors on front.
  UTP cabling.

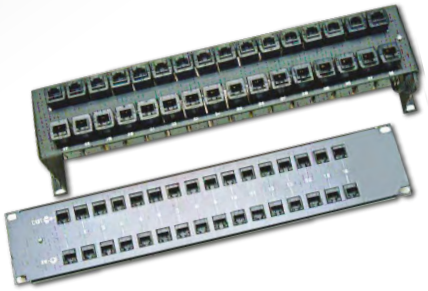

- ***Gamme PCH***

  Available in 48, 24 and 12 ports. Category 6, PoE and Telecom versions. Connection by self-stripping connectors/terminal. UTP cabling.

Installation

The surge protector for IT networks must be installed while respecting the following principles:

- The surge protector and the protected equipment must be interconnected with the bonding network of the installation.
- The earth discharge conductor (between the earth output of the surge protector and the bonding circuit of the installation) must be as short as possible (less than 0.50 m).
- The AC power supply of the equipment must also be surge protected.

Protecting Video Data Transmission

Video transmission lines (surveillance cameras) are regularly subjected to transient surges due to the nature of their distributed application. In order to insure the integrity of these installations, the application of dedicated SPDs at the equipment level (cameras) as well as at the Digital Recording Devices (DVRs) is absolutely necessary.

CITEL range

The CITEL surge protectors for video-transmission are adapted to different configurations:

- Video via coaxial cable: a surge protector is installed on the coaxial connection (CITEL, CXP, CNP range). The terminal power supply and control links must also be protected. The MSP-VM-2P surge protector brings together all the protection devices in one single box.

MSP-VM-2P

CNP

- Video over IP: a MJ8-CAT5E type surge protector must be installed on the IP connection. The AC power supply of the terminal equipment must also be protected. The MSP-VM/R surge protector brings together all the protection devices in one single box.

MSP-VM/R

- Video over PoE: a PoE compatible surge protector (MJ8-POE) must be installed on the terminal equipment. In the case of outdoor installation, the CMJ8-POE version is necessary.

MJ8-POE

Citel MJ8 series

Installation

The protection of your equipment
ethernet

Mounting
On Rail
or by flange

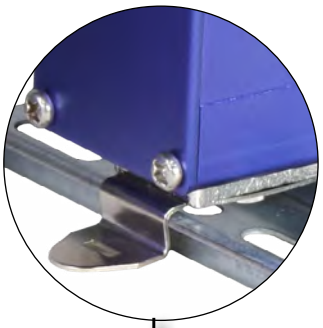

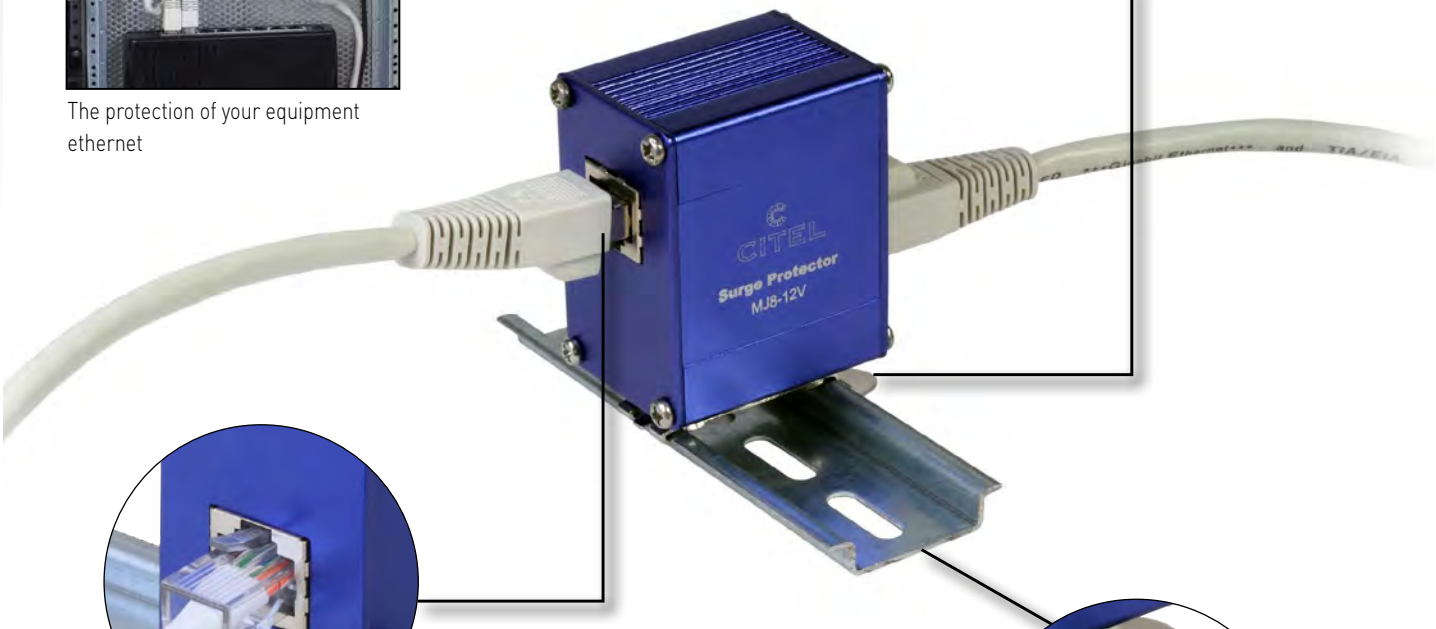

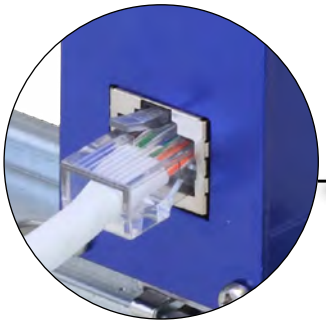

RJ45 connection
Immediate implementation by connection
RJ45 cables

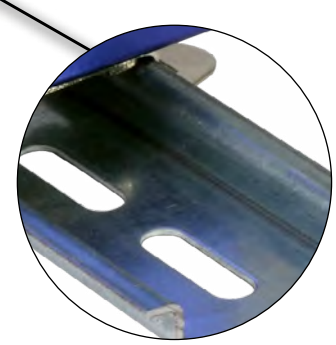

Ground connection
via DIN Rail

Data Surge Protectors
MJ8 series

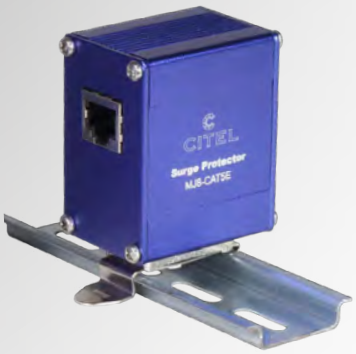

MJ8-CAT6S / MJ8-CAT5E

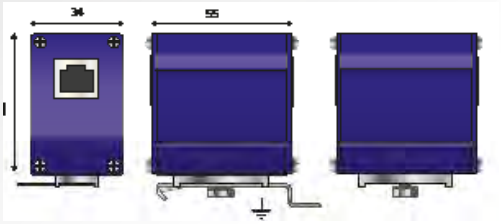

Mounting Flange | Rail DIN mounting | Screw lug

Diagram for 1 pair

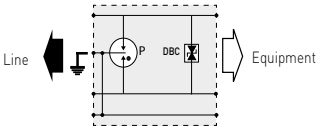

P : 3-electrode gas tube
DBC : Low capacitance diode

- **100M/1G/ 10Gigabit Ethernet compatible**
- **RJ45 connectors**
- **Bi-directional**
- **Mounted on frame or DIN rail**
- **IEC 61643-21, EN 61643-21 and UL497B compliance**

Characteristics

CITEL Model		MJ8-CAT6S	MJ8-CAT5E
Description		RJ45 surge protector for Category 6 network	RJ45 surge protector for Category 5E network
Network		10Gigabit Ethernet câblage Cat.6	Gigabit Ethernet câblage Cat.5E
Max. data rate		10 Gbps	1 Gbps
SPD configuration		4 pairs + shielded	4 pairs + shielded
Pin outs		(1-2)(3-6)(4-5)(7-8)	(1-2)(3-6)(4-5)(7-8)
Nominal line voltage	Un	5 Vdc	5 Vdc
Max. DC operating voltage	Uc	8 Vdc	8 Vdc
Max. Load current	IL	1000 mA	1000 mA
Max. frequency	f max	> 250 MHz	> 100 MHz
Insertion loss		< 1 dB	< 1 dB
Line/Ground Nominal discharge current *8/20µs Test x 10 - category C2*	In	2000 A	2000 A
Nominal discharge current Line/Line *8/20µs Test x 10 - category C2*	In	500 A	500 A
Impulse current - *2 x 10/350µs Test - D1 Category*	Iimp	500 A	500 A
Protection level	Up	20 V	20 V
Failsafe behavior		Short-circuit	Short-circuit
Mechnical characteristics			
Dimensions		see diagram	
Format		RJ45 connector	
Connection to Network		RJ45 shielded connector female input/output	
Disconnection indicator		transmission interrupt - default mode 2	
Mounting		Mounting flange,Screw lug, DIN Rail	
Operating temperature		-40/+85°C	
Protection rating		IP20	
Housing material		Aluminium	
Standards compliance		IEC 61643-21 / EN 61643-21 / UL497B IEEE 802-3an	
Part number		560303	560201

Gigabit POE Surge Protectors
MJ8-POE series

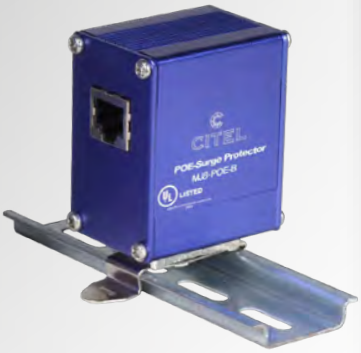

Mounting Flange Rail DIN mounting Screw lug

Diagram for 1 pair

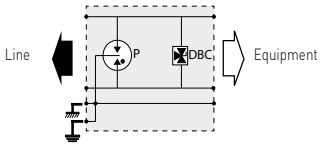

P : 3-electrode gas tube
DBC : 3-pole Low capacitance diode

- **POE compatible**
- **Shielded enclosure and connectors**
- **2 kA discharge capability**
- **IEC 61643-21, EN 61643-21 compliance**
- **UL497B**

Characteristics

CITEL Model		MJ8-POE-A	MJ8-POE-B
Description		RJ45 surge protector for POE-A	RJ45 surge protector for POE-B
Network		POE and Gigabit Ethernet, High POE	POE and Gigabit Ethernet, High POE
Max. data rate		1000 Mbps	1000 Mbps
SPD configuration		4 pairs + shielded	4 pairs + shielded
Pin outs		(1-2)(3-6)(4-5)(7-8)	(1-2)(3-6)(4-5)(7-8)
Nominal line voltage	Un	48 Vdc	5 Vdc/48 Vdc
Max. DC operating voltage	Uc	60 Vdc	7.5 Vdc (1.2.3.6) - 60 Vdc (4.5.7.8)
Max. Load current	IL	1200 mA	1200 mA
Max. frequency	f max	> 100 MHz	> 100 MHz
Insertion loss		< 1 dB	< 1 dB
Line/Ground Nominal discharge current *8/20µs Test x 10 - category C2*	In	2000 A	2000 A
Nominal discharge current Line/Line *8/20µs Test x 10 - category C2*	In	500 A	500 A
Impulse current - *2 x 10/350µs Test - D1 Category*	Iimp	500 A	500 A
Protection level	Up	70 V	20/70 V
Failsafe behavior		Short-circuit	Short-circuit
Mechnical characteristics			
Dimensions		see diagram	
Format		Metallic box with connectors input/output	
Connection to Network		RJ45 shielded connector female input/output	
Disconnection indicator		transmission interrupt - default mode 2	
Mounting		Mounting flange,Screw lug, DIN Rail	
Operating temperature		-40/+85°C	
Protection rating		IP20	
Housing material		Aluminium	
Standards compliance		IEC 61643-21 / EN 61643-21 / UL497B IEEE 802-3ab/3at	
Part number		581519	581518

LISTED

Surge protector for coaxial line and RJ
DIN-BNC series

DIN-E-C6

SPDINRAK

DIN-E-C6

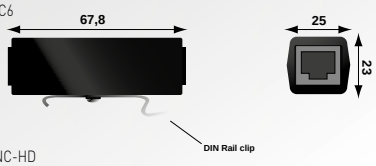

DIN-BNC-HD

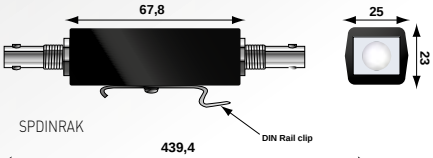

SPDINRAK

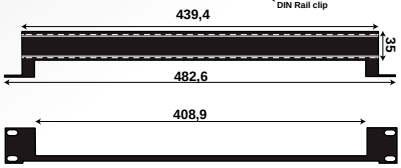

DIN-E-C6

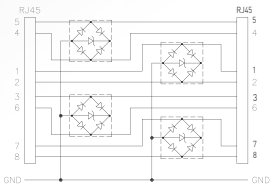

DIN-POE

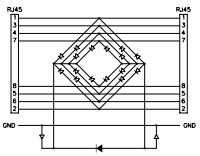

DIN-BNC-HD

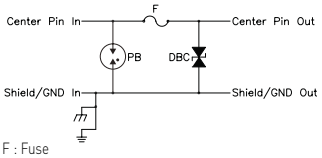

F : Fuse
PB : 2-electrode gaz tube
DBC : 3-pole low capacitance diode

- **Surge protector BNC or RJ45**
- **Mounting on DIN rail**
- **Adaptable on specific rack 19" (SPDINRAK)**
- **IEC 61643-21, EN 61643-21 and UL497B compliance**

Characteristics

CITEL Model		DIN-E-C6	DIN-POE-A	DIN-POE-B	DIN-T	DIN-B	DIN-G	DIN-BNC-HD
Description		RJ45 surge protector for cat.6 network	Surge protector for POE	Surge protector for POE	Surge protector for RJ line	RJ45 surge protector for ISDN network	Surge protector for telephone line	Surge protector for coaxial line
Network		10Gigabit Ethernet Cat.6	POE A Gigabit Ethernet POE Plus	POE B Gigabit Ethernet POE Plus	RS232 - RS485	ISDN	RTC, ADSL2+, 4 pairs	Video line
Max. data rate		1000 Mbps	1000 Mbps	1000 Mbps	100 Mbps	40 Mbps	40 Mbps	1000 Mbps
SPD configuration		8 wires	8 wires	8 wires	8 wires	8 wires	8 wires	1 coaxial line
Pin outs		(1-2)(3-6)(4-5)(7-8)	(1-2)(3-6)(4-5)(7-8)	(1-2)(3-6)(4-5)(7-8)	(1-2)(3-6)(4-5)(7-8)	(1-2)(3-6)(4-5)(7-8)	(1-2)(3-6)(4-5)(7-8)	-
Nominal line voltage	Un	< 50 V	48 Vdc	5 VDC/48Vdc	< 50 V	< 50 V	< 50 V	< 100 V
Max. DC operating voltage	Uc	7.5 Vdc	60 Vdc	Pin 1.2.3.4 : 7.5Vdc Pin 5.6.7.8 : 60Vdc	18 Vdc	60 Vdc	240 Vdc	7.5 Vdc
Max. Load current	IL	750 mA	750 mA	750 mA	750 mA	750 mA	750 mA	750 mA
Max. frequency	f max	> 250 MHz	> 100 MHz	> 100 MHz	> 100 MHz	> 100 MHz	> 100 MHz	> 100 MHz
Insertion loss		< 1 dB	< 1 dB	< 1dB	< 1 dB	< 1 dB	< 1 dB	< 1 dB
Line/Ground Nominal discharge current *8/20µs Test x 10 - C2 category*	In	500 A	250 A	600 A/250 A	300 A	300 A	400 A	5000 A
Nominal discharge current Line/Line *8/20µs Test x 10 - C2 category*	In	500 A	250 A	600 A/250 A	300 A	300 A	400 A	5000 A
Impulse current - *2 x 10/350µs Test - D1 Category*	limp	-	-	-	-	-	-	500 A
Protection level	Up	20 V	80 V	20 V/80 V	30 V	70 V	300 V	20 V
Failsafe behavior		Short-circuit	Short-circuit	Short-circuit	Short-circuit	Short-circuit	Short-circuit	Short-circuit
Mechnical characteristics								
Dimensions		see diagram						
Format		Connector RJ45						connector BNC
Connection to Network		connector RJ45 female/female						connector BNC fem/fem
Disconnection indicator		transmission interrupt - default mode 2						
Mounting		DIN rail or specific 19'' rack model SPDINRAK (P/N 899001)*						
Operating temperature		-40/+85°C						
Protection rating		IP20						
Housing material		Thermoplastic UL94-V0						
Standards compliance		IEC 61643-21 / EN 61643-21 / UL497B IEEE 802-3an	IEC 61643-21 / EN 61643-21 / UL497B IEEE 802-3at		IEC 61643-21 / EN 61643-21 / UL497B			
Part number		6236	6352	891709	891710	6375	6374	6286

* : possibility to mount 16 DINxxx or 12 MJ8xxx on rack : SPDINRAK

Outdoor gigabit POE surge protector
CMJ8-POE series

CMJ8-POE-A-CAT5E

CMJ8-POE-A/PCB

CRMJ8-POE-C6

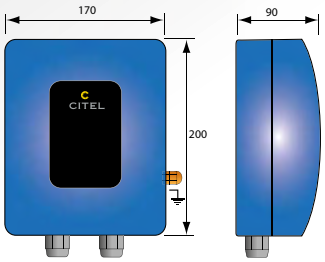

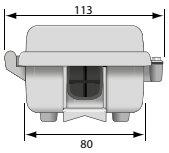

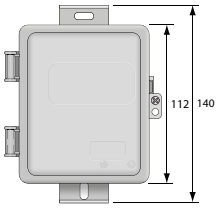

Diagram for 1 pair

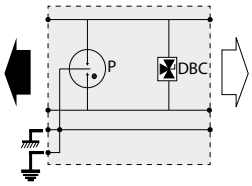

P : 3-electrode gas tube
DBC : 3-pole low capacitance diode

- **POE compatible**
- **Outdoor application**
- **Plastic enclosures (CMJ8/CGMJ8) or metalic (CRMJ8)**
- **IP65 and IP66**
- **Shielded RJ45 connectors**
- **2 kA discharge capability**
- **IEC 61643-21, EN 61643-21 and UL497B compliance**
- **UL497A**

Characteristics

CITEL Model		C*MJ8-POE-A-C5E	C*MJ8-POE-B-C5E	CRMJ8-POE-C6
Description		Outdoor gigabit POE-A surge protector	Outdoor gigabit POE-B surge protector	Outdoor 10gigabit POE surge protector
Network		POE-A and Gigabit Ethernet, high POE	POE-B and Gigabit Ethernet, high POE	POE and 10Gigabit Ethernet, high POE
Max. data rate		1000 Mbps	1000 Mbps	10 Gbps
SPD configuration		8 wires + shielded	8 wires + shielded	8 wires + shielded
Pin outs		(1-2)(3-6)(4-5)(7-8)	(1-2)(3-6)(4-5)(7-8)	(1-2)(3-6)(4-5)(7-8)
Nominal line voltage	Un	48 Vdc	5 Vdc/48 Vdc	5 Vdc/48 Vdc
Max. DC operating voltage	Uc	60 Vdc - 650 mA	7.5 Vdc (1.2.3.6) - 650 mA. 60 Vdc (4.5.7.8) - 650 mA	7.5 Vdc - 650 mA. 60 Vdc - 650 mA
Max. Load current	IL	1200 mA	1200 mA	1200 mA
Max. frequency	f max	> 100 MHz	> 100 MHz	> 250 MHz
Insertion loss		< 1 dB	< 1 dB	< 1 dB
Line/Ground Nominal discharge current *- 8/20µs Test x 10 - category C2*	In	2000 A	2000 A	2000 A
Nominal discharge current Line/Line *- 8/20µs Test x 10 - category C2*	In	500 A	500 A	500 A
Impulse current - *2 x 10/350µs Test - D1 Category*	Iimp	500 A	500 A	500 A
Protection level	Up	70 V	20/70 V	20/70 V
Failsafe behavior		Short-circuit	Short-circuit	Short-circuit
Mechnical characteristics				
Spare unit		CMJ8-POE-A-C5E/PCB	CMJ8-POE-B-C5E/PCB	CRMJ8-POE-C6/PCB
Dimensions		see diagram		see diagram
Format		Plastic Box with connectors input/output		Metal Box with connectors input/output - Reinforced seal
Connection to Network		RJ45 shielded connectors female input/output		RJ45 shielded connectors female input/ output
Disconnection indicator		transmission interrupt - default mode 2		transmission interrupt - default mode 2
Mounting		on plate or pole		on plate or pole
Operating temperature		-40/+85°C		-40/+85°C
Outdoor application		yes		yes
Housing material		Thermoplastic UL94-V0		Aluminum cast
Standards compliance		IEC 61643-21 / EN 61643-21 / UL497B IEEE 802-3ab/3at		IEC 61643-21 / EN 61643-21 / UL497B IEEE 802-3ab/3at
Part number				
IP65 version		CMJ8-POE-A-C5E 892002	CMJ8-POE-B-C5E 892003	
IP66 version - Reinforced seal		CGMJ8-POE-A-C5E 892004	CGMJ8-POE-B-C5E 892005	CRMJ8-POE-C6 581529

UL LISTED

19" patch panel surge protector
PL series

PL24-CAT6

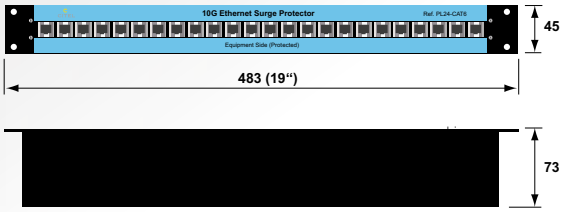

Diagram for 1 pair

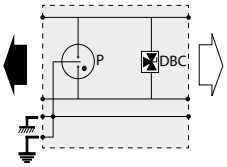

P: 3-electrode gas tube
DBC : 3-pole low capacitance diode

- **For 100M/1G/10Gigabit Ethernet network**
- **19" rack mounted**
- **12 or 24 ports**
- **In/out : RJ45 shielded**
- **Gas tube/Diode diagram**
- **Primary protection**
- **IEC 61643-21, EN 61643-21 and UL497A compliance**

Characteristics

CITEL Model		PL12-CAT6	PL24-CAT6
Description		19'' patch panel surge protector for high speed network STP	19'' patch panel surge protector for high speed network STP
Network		10Gigabit Ethernet -Cat.6 cabling	10Gigabit Ethernet -Cat.6 cabling
Max. data rate		10 Gbps	10 Gbps
SPD configuration		12 ports de 8 wires	24 ports de 8 wires
Pin outs		(1-2)(3-6)(4-5)(7-8)	(1-2)(3-6)(4-5)(7-8)
Nominal line voltage	Un	5 Vdc	5 Vdc
Max. DC operating voltage	Uc	8 Vdc	8 Vdc
Max. Load current	IL	1000 mA	1000 mA
Max. frequency	f max	250 MHz	250 MHz
Insertion loss		< 1 dB	< 1 dB
Line/Ground Nominal discharge current - *8/20µs Test x 10 - category C2*	In	2000 A	2000 A
Nominal discharge current Line/Line - *8/20µs Test x 10 - category C2*	In	500 A	500 A
Protection level	Up	20 V	20 V
Failsafe behavior		Short-circuit	Short-circuit
Mechnical characteristics			
Dimensions		see diagram	
Format		Rack 19''	
Connection to Network		RJ45 shielded female input/output	
Disconnection indicator		transmission interrupt - default mode 2	
Spare unit		12-port PCB	
Mounting		Baie 19''	
Operating temperature		-40/+85°C	
Protection rating		IP20	
Housing material		Aluminium	
Standards compliance		IEC 61643-21 / EN 61643-21 / UL497A (surge) IEEE 802-3an (transmission)	
Part number		581534	581515

19" patch panel surge protector for Data-Telecom lines
PCH series

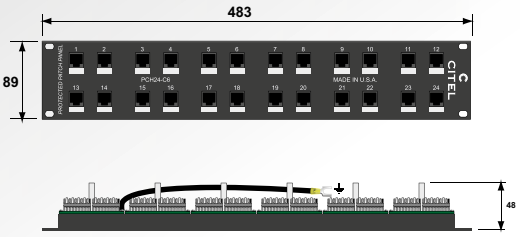

Surge protector circuit 2 lines

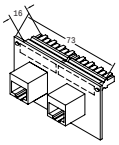

PCH-POE

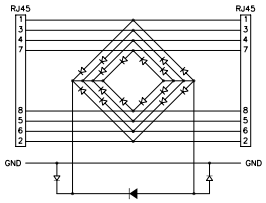

PCH-C6

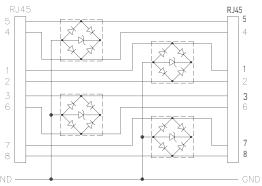

- **19" Rack mounted**
- **12, 24 et 48 ports**
- **In/out: - Connector type 110 back (punch down)**
  - RJ45 front
- **Available for Ethernet network and Telecom**
- **Possible maintenance per 2 lines circuit**
- **Secondary protection**
- **IEC 61643-21 and UL497B compliance**

Characteristics

CITEL Model		PCH*-C6	PCH*-POE-A	PCH*-POE-B	PCH12-RJ45-G
Description		19'' patch panel CAT6 surge protector for Data-Telecom lines	19'' patch panel surge protector - POE-A line	19'' patch panel surge protector - POE-B line	19'' patch panel surge protector - Telecom line
Network		100/1000/10G BaseT, RS422, RS485, RS423, Ethernet	POE mode A, Gigabit ethernet, POE Plus	POE mode B, Gigabit Ethernet, POE Plus	Telephone line, ADSL
Max. data rate		10 Gbps	1000 Mbps	1000 Mbps	40 Mbps
SPD configuration		12, 24 or 48 ports with 8 wires	12, 24 or 48 ports with 8 wires	12, 24 or 48 ports with 8 wires	12 ports of 8 wires
Pin outs		(1-2)(3-6)(4-5)(7-8)	(1-2)(3-6)(4-5)(7-8)	(1-2)(3-6)(4-5)(7-8)	(1-2)(3-6)(4-5)(7-8)
Nominal line voltage	Un	5 vdc	48 Vdc	5 Vdc/48 Vdc	200 vdc
Max. DC operating voltage	Uc	7.5 Vdc	60 Vdc	Pin 1.2.3.6 : 7.5 Vdc - Pin 4.5.7.8 : 60 Vdc	240 Vdc
Max. Load current	IL	750 mA	750 mA	750 mA	750 mA
Max. frequency	f max	250 MHz	> 100 MHz	> 100 MHz	> 100 MHz
Insertion loss		< 1 dB	< 1 dB	< 1 dB	< 1 dB
Line/Ground Nominal discharge current *8/20µs Test x 10 - C2 category*	In	500 A	250 A	600 A/250 A	351 A
Nominal discharge current Line/Line *8/20µs Test x 10 - C2 category*	In	500 A	250 A	600 A/250 A	350 A
Protection level	Up	20 V	20 V	20 V/ 80 V	300 V
Failsafe behavior		Short-circuit	Short-circuit	Short-circuit	Short-circuit
Mechnical characteristics					
Dimensions		see diagram			
Format		Rack 19''			
Connection to Network		Self-stripping connector 110 back/RJ45 female. front			
Disconnection indicator		transmission interrupt - default mode 2			
Spare unit		removable circuit 2 ports			
Mounting		Baie 19''			
Operating temperature		-40/+85°C			
Protection rating		IP20			
Housing material		Aluminium			
Standards compliance		IEC 61643-21 / EN 61643-21 / UL497B (surge) IEEE 802-3an (transmission)			IEC 61643-21 / EN 61643-21 / UL497B
Part number					
12-port version		PCH12-C6 6249	PCH12-POE-A 6273	PCH12-POE-B 6276	PCH12-RJ45-G 6350
24-port version		PCH24-C6 6251	PCH24-POE-A 6274	PCH24-POE-B 6277	on request -
48-port version		PCH48-C6 6252	PCH48-POE-A 6275	PCH48-POE-B 6278	on request -

* : 12, 24 or 48-port

19" patch panel surge protector for high-speed network
RAK series

RAK-B-SO

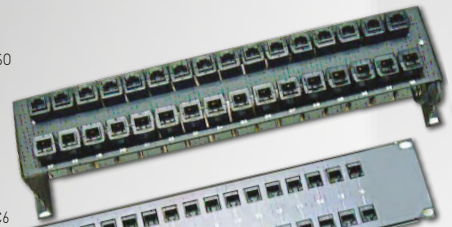

RAK-E-C6

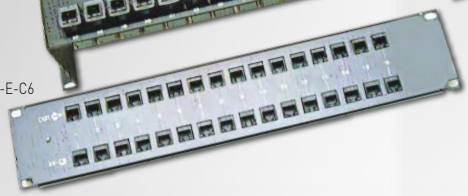

RAK-BNC

RAK-B-SO

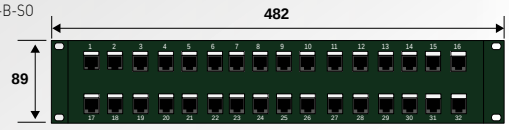

RAK-E-C6

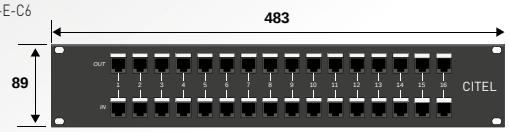

RAK-BNC

Surge protector circuit 1 line

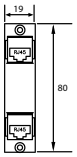

RAK-B-SO

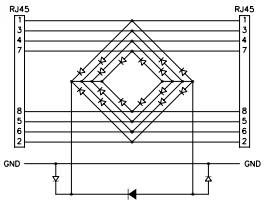

RAK-E-C6

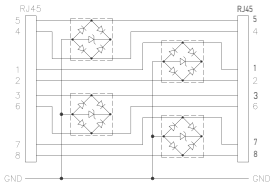

RAK-BNC

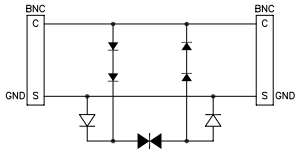

- **19" Rack mounted or stand off**
- **16 or 32 ports**
- **In/out front : RJ45, BNC**
- **Available for Telecom and Ethernet networks**
- **Possible maintenance per line**
- **Secondary protection**
- **IEC 61643-21 and UL497B compliance**

Characteristics

CITEL Model		RAK*-E-C6	RAK*-POE-A	RAK*-POE-B	RAK16-BNC
Description		19" patch panel surge protector for high-speed network			
Network		100/1000/10G BaseT, RS422, RS485, RS423, Ethernet	POE mode A, Gigabit Ethernet, POE Plus	POE mode B, Gigabit Ethernet, POE Plus	Video
Max. data rate		10 Gbps	1000 Mbps	1000 Mbps	1000 Mbps
SPD configuration		16 ou 32 ports de 8 fils	16 ou 32 ports de 8 fils	16 ou 32 ports de 8 fils	16 ports BNC
Pin outs		(1-2)(3-6)(4-5)(7-8)	(1-2)(3-6)(4-5)(7-8)	(1-2)(3-6)(4-5)(7-8)	-
Nominal line voltage	Un	5 Vdc	48 Vdc	5 Vdc/48 Vdc	5 Vdc
Max. DC operating voltage	Uc	7.5 Vdc	60 Vdc	Pin 1.2.3.6 : 7.5Vdc Pin 4.5.7.8 : 60 Vdc	7.5 Vdc
Max. Load current	IL	750 mA	750 mA	750 mA	750 mA
Max. frequency	fmax	250 MHz	> 100 MHz	> 100 MHz	> 100 MHz
Insertion loss		< 1 dB	< 1 dB	< 1 dB	< 1 dB
Line/Ground Nominal discharge current *8/20µs Test x 10 - C2 category*	In	500 A	250 A	600 A/250 A	600 A
Nominal discharge current Line/Line *8/20µs Test x 10 - C2 category*	In	500 A	250 A	600 A/250 A	600 A
Protection level	Up	20 V	80 V	20V/80 V	20 V
Failsafe behavior		Short-circuit	Short-circuit	Short-circuit	Short-circuit
Mechnical characteristics					
Dimensions		see diagram			
Format		Rack 19"			
Connection to Network		RJ45 female intput/output			RJ45 female intput/output
Disconnection indicator		transmission interrupt - default mode 2			
Spare unit		removable circuit 1 line			without
Mounting		19" rack or wall mounted (version SO)			19" rack
Operating temperature		-40/+85°C			
Protection rating		IP20			
Housing material		Aluminium			
Standards compliance		IEC 61643-21 / EN 61643-21 / UL497B / IEEE 802-3an	IEC 61643-21/ EN 61643-21 / UL497 B / IEEE 802-3at		IEC 61643-21 / EN 61643-21 / UL497B
Part number					
16-port version		RAK16-E-C6 6254	RAK16-POE-A 6372	RAK16-POE-B 6256	RAK16-BNC 6253
32-port version		RAK32-E-C6 891103	RAK32-POE-A *on request*	RAK32-POE-B *on request*	- -
16-port version stand-off		RAK16-E-C6-SO 891102	RAK16-POE-A-SO 6282	RAK16-POE-B-SO 6285	- -
32-port version stand-off		RAK32-E-C6-SO 6257	RAK32-POE-A-SO 891104	RAK32-POE-B-SO 891105	- -

* : 16 or 32-port

Surge protector for Video Survey Camera
MSP-VM series

MSP-VM120-2P

MSP-VM24

MSP-VM120-R

MSP-VM

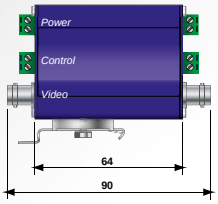

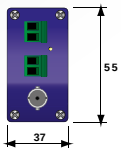

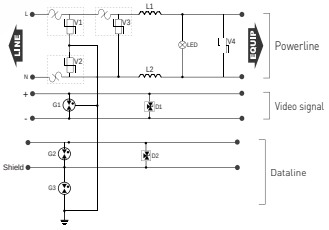

MSP-VM-2P

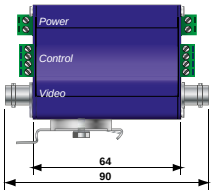

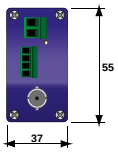

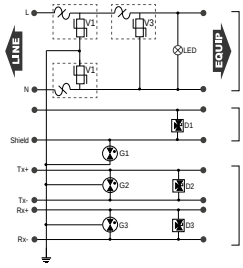

MSP-VM-R

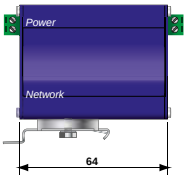

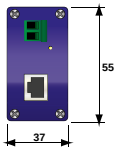

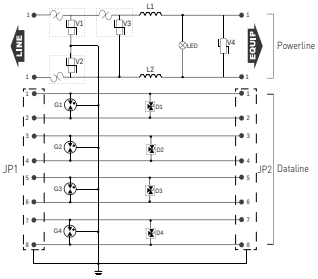

D : Clamping diode
G : Gaz tube
V : Varistor
LED : Indicator
L : Inductor

Characteristics

		MSP-VM Range		
CITEL Model		**MSP-VM12**	**MSP-VM24**	**MSP-VM230**
Description		Surge protector for video survey camera Power/ Data/Video		
AC power specifications				
Network		12 Vac/Vdc	24 Vac/Vdc	230 V single phase
AC system		-	-	TT-TN
Protection mode(s)		CM/DM	CM/DM	CM/DM
Max. DC operating voltage	Uc	15 Vac/Vdc	30 Vac/Vdc	255 Vdc
Max. Load current	IL	5 A	5 A	5 A
Residual current *- Leakage current at Uc*	Ic	None	None	None
Nominal discharge current	In	5 kA	5 kA	5 kA
Max. discharge current *-max. withstand Ø 8/20 µs by pole*	Imax	10 kA	10 kA	10 kA
Withstand on Combination waveform *- Class III test*	Uoc	10 kV/5 kA	10 kV/5 kA	10 kV/5 kA
Protection level	Up	0.22 kV	0.22 kV	1.2 kV
Disconnection indicator		Green LED OFF and line cut-off		
Connection to Network		screw terminal 2.5 mm² max		
Standards compliance		IEC 61643-11 / EN 61643-11 / UL1449 ed.4		
Dataline specifications				
Network		1 pair signal 0-5 V	1 paire signal 0-5 V	1 pair signal 0-5 V
Max. DC operating voltage	Uc	8 Vdc	8 Vdc	8 Vdc
Max. Load current	IL	300 mA	300 mA	300 mA
Max. frequency	f max	10 MHz	10 MHz	16 MHz
Insertion loss		< 1dB	< 1dB	< 1dB
Nominal discharge current	In	2.5 kA	2.5 kA	2.5 kA
Max. discharge current *-max. withstand Ø 8/20 µs by pole*	Imax	5 kA	5 kA	5 kA
Protection level	Up	20 V	20 V	20 V
Disconnection indicator		interruption of transmission - default mode 2		
Connection to Network		screw terminal 1.5 mm² max		
Standards compliance		IEC 61643-21 / EN 61643-21		
Videoline specifications				
Network		signal video	signal video	signal video
Max. DC operating voltage	Uc	6 Vdc	6 Vdc	6 Vdc
Max. Load current	IL	300 mA	300 mA	300 mA
Max. frequency	f max	100 MHz	100 MHz	100 MHz
Insertion loss		< 1dB	< 1dB	< 1dB
Nominal discharge current	In	5 kA	5 kA	5 kA
Max. discharge current *-max. withstand Ø 8/20 µs by pole*	Imax	10 kA	10 kA	10 kA
Protection level	Up	20 V	20 V	20 V
Disconnection indicator		interruption of transmission - default mode 2		
Connection to Network		connector BNC female		
Standards compliance		IEC 61643-21 / EN 61643-21		
Mechnical characteristics				
Dimensions		see diagram		
Mounting		DIN rail or plate (flange)		
Operating temperature		-40/+85°C		
Protection rating		IP20		
Housing material		anodized aluminum		
Part number		420403	420402	420401

Surge protector for Video Survey Camera
MSP-VM series

- **Security camera Surge Protector**
- **AC, Data and Video in single unit**
- **Compact aluminium housing**
- **Rail DIN mounting or plate mounting**
- **3 versions :**
  - **AC + Coaxial Video + Data 1 pair : MSP-VMxx**
  - **AC + Coaxial Video + Data 2 pairs : MSP-VMxx-2P**
  - **AC + Cat.5 - RJ45 : MSP-VMxx/R**
- **IEC 61643-21, IEC 61643-11 and EN 61643-21, EN 61643-11 compliance**

MSP-VM-2P Range			
MSP-VM12-2P	**MSP-VM24-2P**	**MSP-VM120-2P**	**MSP-VM230-2P**
Surge protector for video survey camera Power/Data/Video			
12 Vac/Vdc	24 Vac/Vdc	120 V single phase	230 V single phase
-	-	TT-TN	TT-TN
CM/DM	CM/DM	CM/DM	CM/DM
15 Vac/Vdc	30 Vac/Vdc	150 Vdc	255 Vdc
5 A	5 A	5 A	5 A
None	None	None	None
5 kA	5 kA	5 kA	5 kA
10 kA	10 kA	10 kA	10 kA
10 kV/5 kA	10 kV/5 kA	10 kV/5 kA	10 kV/5 kA
0.22 kV	0.22 kV	0.8 kV	1.2 kV
Green LED OFF and line cut-off			
screw terminal 2.5 mm² max			
IEC 61643-11 / EN 61643-11 / UL1449 ed.4			
2 pairs signal 0-5 V 8 Vdc	2 pairs signal 0-5 V 8 Vdc	2 pairs signal 0-5 V 8 Vdc	2 pairs signal 0-5 V 8 Vdc
300 mA	300 mA	300 mA	300 mA
16 MHz	16 MHz	16 MHz	16 MHz
< 1dB	< 1dB	< 1dB	< 1dB
2.5 kA	2.5 kA	2.5 kA	2.5 kA
5 kA	5 kA	5 kA	5 kA
20 V	20 V	20 V	20 V
interruption of transmission - default mode 2			
screw terminal 1.5 mm² max			
IEC 61643-21 / EN 61643-21			
signal video	signal video	signal video	signal video
6 Vdc	6 Vdc	6 Vdc	6 Vdc
300 mA	300 mA	300 mA	300 mA
100 MHz	100 MHz	100 MHz	100 MHz
< 1dB	< 1dB	< 1dB	< 1dB
5 kA	5 kA	5 kA	5 kA
10 kA	10 kA	10 kA	10 kA
20 V	20 V	20 V	20 V
interruption of transmission - default mode 2			
connector BNC female			
IEC 61643-21 / EN 61643-21			
see diagram			
DIN rail or plate (flange)			
-40/+85°C			
IP20			
anodized aluminum			
420433	420432	420434	420431

MSP-VM/R range			
MSP-VM12/R	**MSP-VM24/R**	**MSP-VM120/R**	**MSP-VM230/R**
Surge protector for video survey camera Power/data			
12 Vac/Vdc	24 Vac/Vdc	120 V single phase	230 V single phase
-	-	TT-TN	TT-TN
CM/DM	CM/DM	CM/DM	CM/DM
15 Vac/Vdc	30 Vac/Vdc	150 Vdc	255 Vdc
5 A	5 A	5 A	5 A
None	None	None	None
5 kA	5 kA	5 kA	5 kA
10 kA	10 kA	10 kA	10 kA
10 kV/5 kA	10 kV/5 kA	10 kV/5 kA	10 kV/5 kA
0.22 kV	0.22 kV	0.8 kV	1.2 kV
Green LED OFF and line cut-off			
screw terminal 2.5 mm² max			
IEC 61643-11 / EN 61643-11 / UL1449 ed.4			
4 pairs signal 0-5 V 8 Vdc	4 pairs signal 0-5 V 8 Vdc	4 pairs s ignal 0-5 V 8 Vdc	4 pairs signal 0-5 V 8 Vdc
300 mA	300 mA	300 mA	300 mA
16 MHz	16 MHz	16 MHz	16 MHz
< 1dB	< 1dB	< 1dB	< 1dB
2.5 kA	2.5 kA	2.5 kA	2.5 kA
5 kA	5 kA	5 kA	5 kA
20 V	20 V	20 V	20 V
interruption of transmission - default mode 2			
RJ45 shielded			
IEC 61643-21 / EN 61643-21			
-	-	-	-
-	-	-	-
-	-	-	-
-	-	-	-
-	-	-	-
-	-	-	-
-	-	-	-
-	-	-	-
-	-	-	-
-	-	-	-
see diagram			
DIN rail or plate (flange)			
-40/+85°C			
IP20			
anodized aluminum			
420413	420412	420414	420411

D-Sub Dataline Surge Protector
DD series

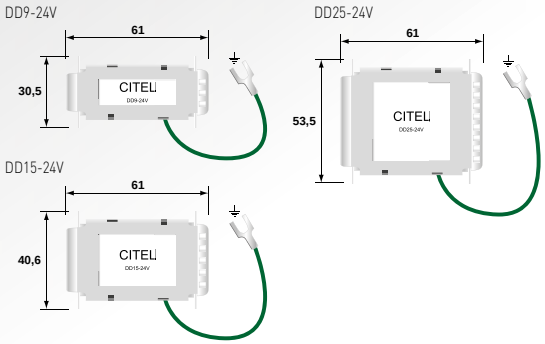

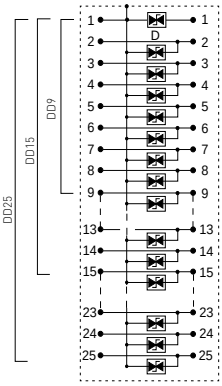

D : Clamping diode

- **"D-Sub" surge protectors**
- **For RS232, RS422, RS485 communication lines**
- **Fast and easy installation**
- **9, 15 and 25-pin connectors**
- **Secondary protection**
- **IEC 61643-21, EN 61643-21 and UL497B compliance**

Characteristics

CITEL Model		DD*-24V	DD*-6V
Description		D-sub dataline surge protector	D-sub dataline surge protector
Network		RS232, RS485, 4-20mA	RS422, RS423
Max. data rate		< 40 Mbps	< 40 Mbps
SPD configuration		9, 15 or 25-pin connector	9, 15 or 25-pin connector
Pin outs		all wires transmitted and protected	all wires transmitted and protected
Nominal line voltage	Un	12 Vdc	5 Vdc
Max. DC operating voltage	Uc	15 V	6 V
Max. Load current	IL	750 mA	750 mA
Max. frequency	f max	> 10 MHz	> 10 MHz
Insertion loss		< 1 dB	< 1 dB
Line/Ground Nominal discharge current *8/20µs Test x 10 - C2 category*	In	300 A	400 A
Line/Line Nominal discharge current *8/20µs Test x 10 - C2 category*	In	300 A	400 A
Protection level	Up	18 V	7.5 V
Failsafe behavior		Short-circuit	Short-circuit
Mechnical characteristics			
Dimensions		see diagram	
Mounting		in/out D-Sub connector unit	
Disconnection indicator		transmission interrupt - default mode 2	
Mounting		on cable	
Operating temperature		-40/+85°C	
Protection rating		IP20	
Housing material		Thermoplastic UL94-V0	
Standards compliance		IEC 61643-21 / EN 61643-21 / UL497B	

Part number				
25-pin connector male/famelle	DD25-24V	6145	DD25-6V	891725
15-pin connector male/famelle	DD15-24V	6214	DD15-6V	6144
9-pin connector male/famelle	DD9-24V	6147	DD9-6V	6148

* : 9, 15 or 25-pin

Coaxial surge protector for video transmission networks
CXC and CNP

CXC06-B/MF

CNP06-B/FM

CXC06-B/MF

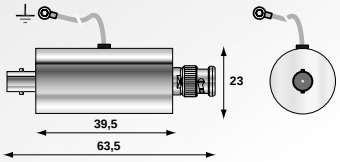

CNP06-F/FF

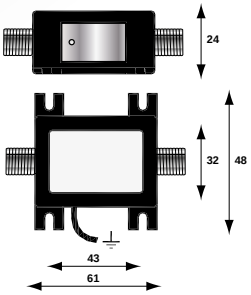

CXC / CNP06

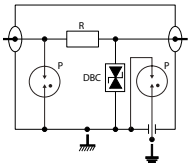

P : 2-electrode gas tube
DBC : Low capacitance diode
R : Resistor

- **Coaxial surge protector**
- **Multiples connectors**
- **Low insertion loss**
- **Easy installation**
- **IEC 61643-21, EN 61643-21 and UL497C/E compliance**

Characteristics

CITEL Model		**CXC06***		**CNP06***	
Description		Coaxial surge protector for video transmission networks		Coaxial surge protector for video transmission networks	
Technology		GDT + Diode		GDT + Diode	
Max. frequency	f	DC - 100 MHz		DC - 100 MHz	
Max Power	P	6 W		4 W	
Impedance	Z	50/75 ohms		50/75 ohms	
Insertion loss		⩽ 0.5 dB		⩽ 0.5 dB	
Return loss		⩾20 dB		>20 dB	
VSWR		< 1.3:1		< 1.3:1	
Max. Load current	IL	0.5 A		0.5 A	
Nominal discharge current - *8/20µs Test x 10 - C2 Category*	In	5 kA		5 kA	
Max. discharge current *-max. withstand @ 8/20 µs by pole*	Imax	10 kA		20 kA	
Impulse current - *2 x 10/350µs Test - D1 Category*	Iimp	2.5 kA		2.5 kA	
Protection level	Up	20 V		20 V	
Failsafe behavior		short-circuit		short-circuit	
Mechnical characteristics					
Dimensions		see diagram			
Connection to Network		BNC or F connector			
Disconnection indicator		transmission interrupt - default mode 2			
Mounting		on cable		on plate	
Operating temperature		-40/+85°C			
Protection rating		IP20			
Housing material		Brass		Metal+plastic	
Standards compliance		IEC 61643-21 / EN 61643-21 / UL497C / UL497E			
Part number					
BNC connector Female/Male		CXC06-B/FM	6301341	CNP06-B/FM	64270
BNC connector Male/Female		CXC06-B/MF	630134	CNP06-B/MF	632611
F connector Female/Female		-	-	CNP06-F/FF	632602
F connector F Male/Female		-	-	CNP06-F/MF	632601

* : BNC or F, Male/Female or Female/Femelle connector

CITEL

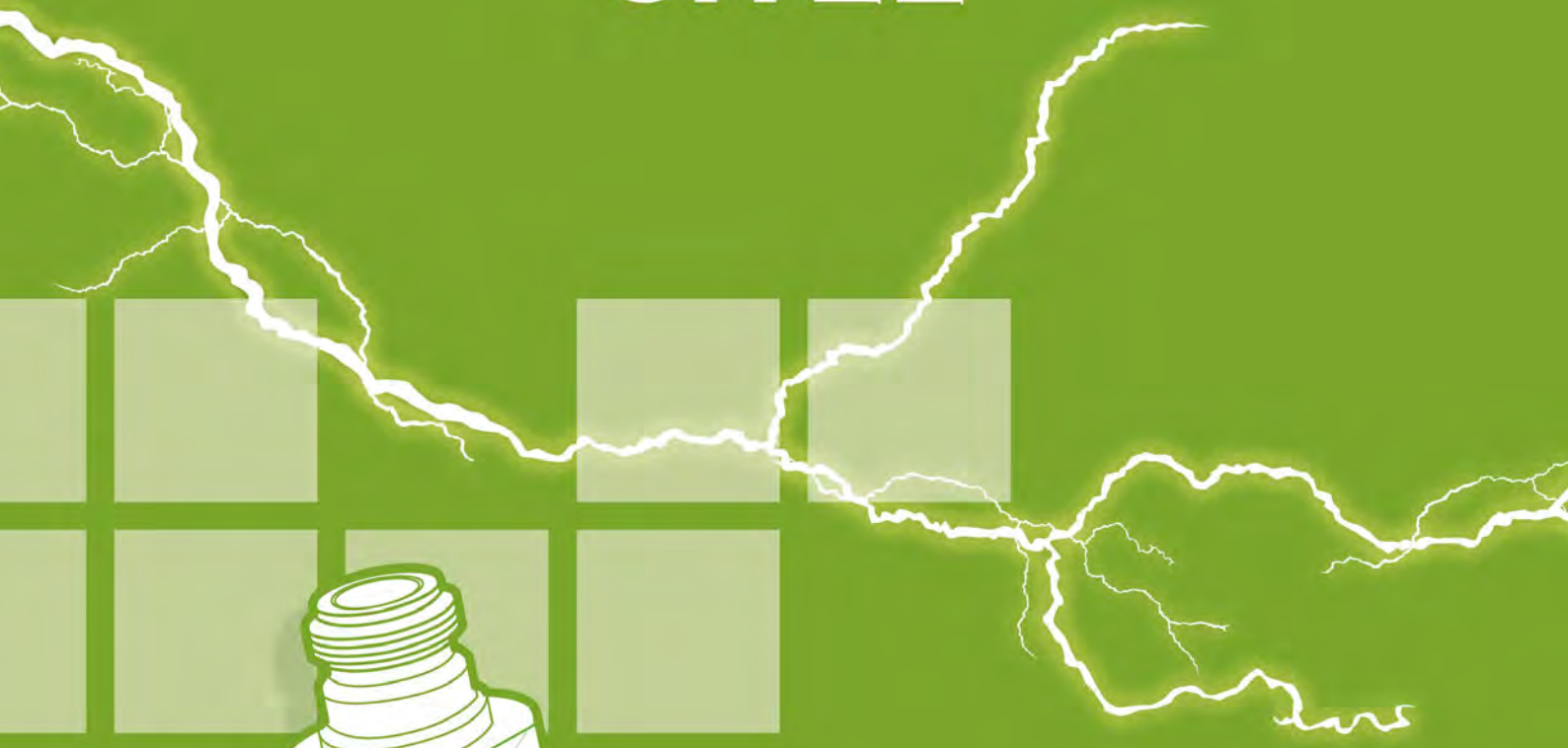

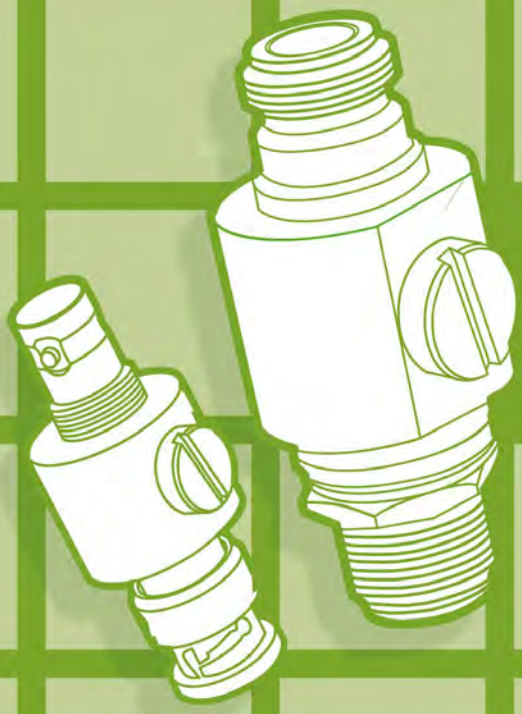

COAXIAL RF

Surge Protectors

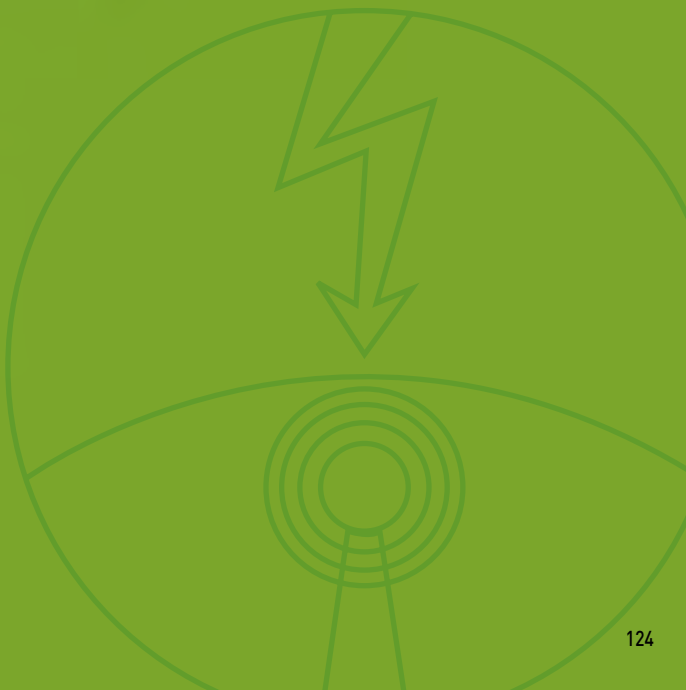

RF Surge Protection

Protection of radiocommunication equipment

Radiocommunication systems, connected to antennae, are especially exposed to lightning phenomena, the maximum risk being a direct strike on the antenna pole.
Equipment, as GSM/UMTS or TETRA base stations, must consider this risk in order to insure a relevant service continuity.
CITEL offers several surge protection technologies for RF lines to comply to the different operation requirements.

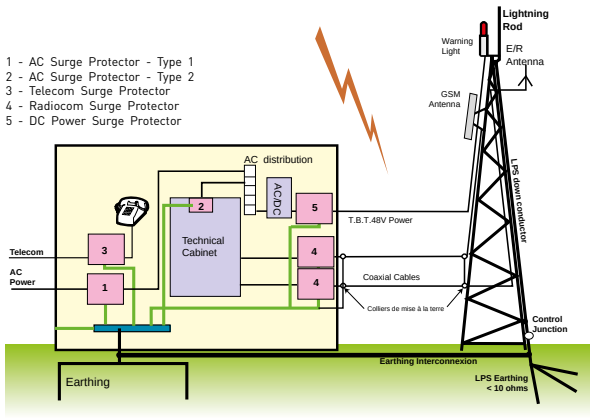

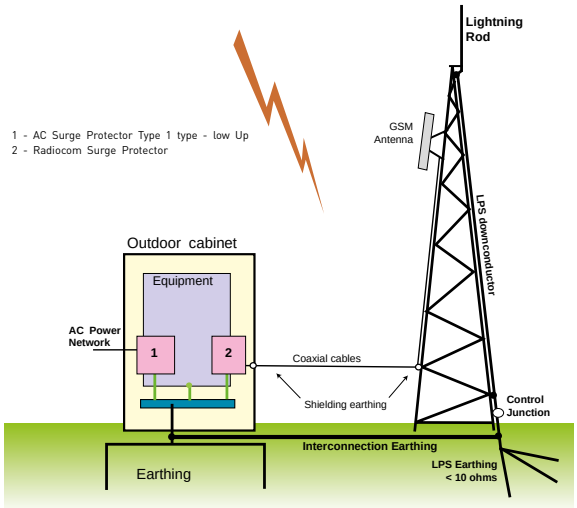

RF surge protection technology

P8AX series (Gas Tube Protection)

The gas discharge tube (GDT) is the only surge protection component usable on very high frequency transmission (several GHz) due to its very low capacitance. In a coaxial surge protector, the GDT is connected in parallel between the central conductor and the external shield ; when its sparkover voltage is reached, during an overvoltage, the line is briefly shorted (arc voltage). The sparkover voltage depends on the rise front of the overvoltage. The higher the dV/dt of the overvoltage, the higher the sparkover voltage of the surge protector.
When the overvoltage disappears, the gas discharge tube returns to its original condition of high isolation and is ready to operate again.
The gas tube is removable, making maintenance rapid in the end-of-life scenario (short-circuit).

The greater advantage of this technology is its very wide bandwidth: from DC (so, compatible with DC voltage injection) to several GHz.

Main characteristics :

- Insertion losses < 0,2 dB
- VSWR < 1,2
- Imax : 20 kA (8/20µs)
- Bandwidth : DC to several GHz
- Connectors : N, BNC, TNC, 7/16, F, SMA, UHF,
- Waterproof IP65

Main characteristics VG option :

- Imax : 6 kA (8/20µs)
- Connector : N
- Prevents the short-circuit of the transmitter (output) and the receiver (input) during a disturbance

CNP/CXP series (GDT protection) and CXP-DCB series (DC Blocked Protection)

CXP protectors are based on GDT to provide high discharge current capability without destruction. This type of products allows for installation in ungrounded systems. In these cases, the CXP isolates the shield from the earth ground and is typically found in applications including wireless radio terminals and TV monitors (antenna, cable or satellite).

CXP-DBC version is a relevant hybrid association between a filter stage and a gas tube : this configuration has the advantage of reducing low frequency disturbances (DC and lightning voltages) while providing a high discharge current capability.

Main characteristics (CXP) :

- isolated ground through GDT
- Insertion losses < 0.5 dB
- VSWR < 1.3
- Imax : 20 kA (8/20µs)
- Bandwidth : DC - 1000 MHz
- Connectors : F, BNC, SE, N...

Main characteristics (CXP-DBC) :

- "DC Block" feature
- Insertion losses < 0.15 dB
- VSWR < 1.2
- Imax : 10 kA (8/20µs)
- Bandwidth : 125 - 1000 MHz
- Connectors : N, BNC

PRC series (Quarter Wave Protection)

The other way to protect antenna lines is relevant replacement of the gas tube by a proper short-circuit chosen according to the operating frequency band. This short-circuit is tuned to one quarter of the wavelength, giving its name to «quarter-wave protection». This tuned short-circuit between the conducting core and the external ground acts as a band-pass filter.
The filter may be selective (narrow band or wide-band), according to the calculation of various mechanical elements.
Since lightning has a low-frequency spectrum (from a few hundred kHz to a few MHz), it will be filtered out from the operating frequencies.
The typical application is the protection of radio lines that do not have a source voltage.

Main characteristics :

- Insertion losses < 0.2 dB
- VSWR < 1.2
- Bandwidth : - 400-500 MHz
  - 870-950 MHz
  - 1700-1950 MHz
  - 1700-2200 MHz
  - 870-220 MHz
- Imax : up to 100 kA (8/20µs)
- Connectors : 7/16, N, BNC, TNC, 7/8 câble

RF Surge Protectors diagrams

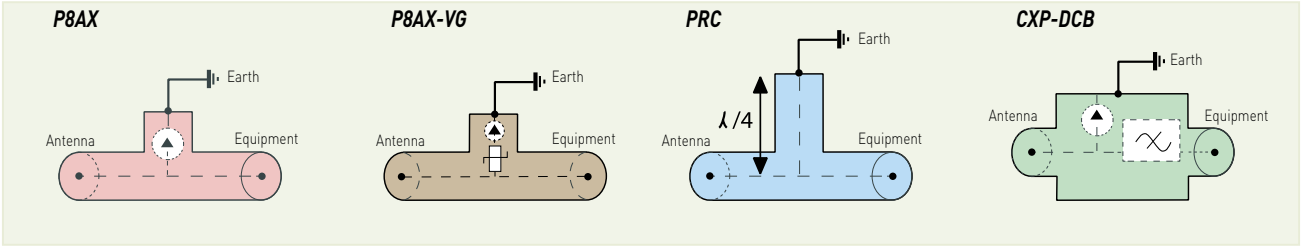

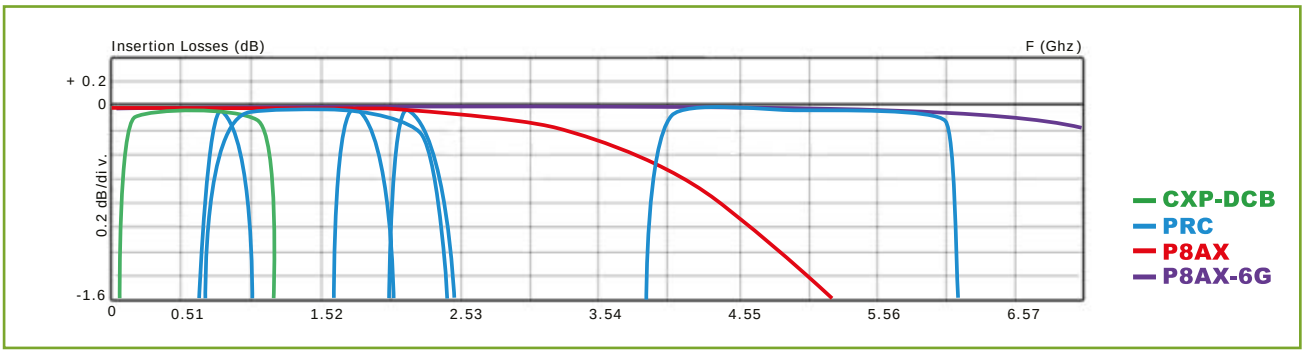

RF Surge Protection

Comparison

Table below allows comparison between the 3 technologies of RF coaxial surge protectors, in order to select the right solution regarding the application and the requirements.

Technology	Gas tube	DC Block	Quarter wave
CITEL series	*P8AX*	*CXP-DCB*	*PRC*
Principle	Sparkover	Sparkover + Filtering	Adapted short-circuit/selective band filter
Residual voltage	from 600V to 2400 V in relation with the dV/dt, then arc regime (short-circuit of the line in the full bandwidth). RF signal disturbed during the protection operation. Except for the option VG	< 100 V Short-circuit of the line in the full bandwidth : RF signal disturbed during the protection operation.	< 20 V RF signal not disturbed during the protection operation.
Bandwidth	DC to 3GHz (dependent oN the coaxial connector and the impedance)	125-1000 MHz	Narrow band (GSM, DCS1800, PCS, DECT, GPS....) up to 5800 MHz
DC injection	Compatible	Not compatible	Not compatible
8/20µs discharge current capability	20 kA	10 kA	Function of the connector : 100 kA for the 7/16, 50 kA for the N
Life expectancy	Linked to the GDT stress	Linked to the GDT stress	Unlimited
Connectors	N, BNC, TNC, UHF, SMA, 7/16 option VG : only N	N, BNC, TNC.	7/16, N, TNC....

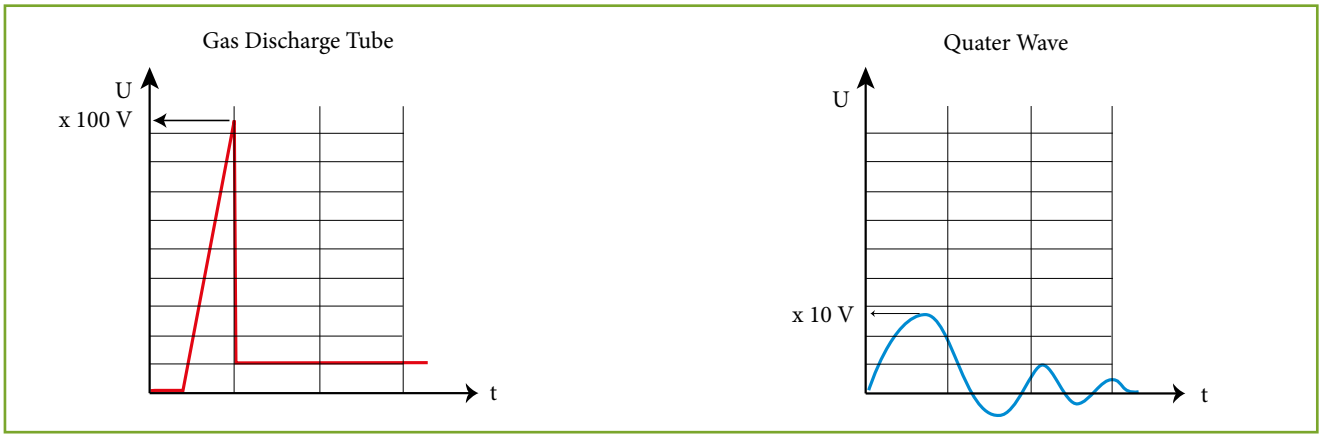

Radio Frequency bands

LF : Low Frequency	30-300 kHz
MF : Medium Frequency	300-3000 kHz
HF : High Frequency	3-30 MHz
VHF : Very High Frequency	30-300 MHz
UHF : Ultra High Frequency	300-3000 MHz
SHF : Super High Frequency	3-30 GHz

A few Microwave applications

Tetra, Tetrapol	380-512 MHz
GSM850	824-894 MHz
Tetra	870-925 MHz
GSM 900	880-960 MHz
GPS	1575 MHz
GSM 1800	1710-1785 MHz
GSM 1900	1850-1990 MHz
DECT	1880-1900 MHz
WCDMA/TD-SCDMA	1850-2025 MHz
UMTS (IMT-2000)	1885-2200 MHZ
WLL (WiMax)	2400-5825 MHz

Installation

The efficiency of coaxial protectors is highly dependent on proper installation, in particular their connection to the earthing network of the installation.
The following installations rules must be strictly observed to ensure the efficiency :

- Equipotential bonding network : all the bonding conductors of the installation must be interconnected and connected to the installation earthing network.

- Optimized connection of the protector to the bonding network : to reduce the residual voltages during lightning discharge currents, the connection of the protector to the bonding network must be as short as possible (less than 50 cm) and has a proper cross section (at least 4 mm²).
  The «feedthrough mounting» versions meet perfectly all these requirements.
  Warning : for good contact, remove carefully all paintings or insulating coatings.
- Location of the protectors : they should preferably be placed at the entrance of the installation (to limit the penetration of lightning currents) and also near sensitive equipment (to enhance protection).

2 types of mounting

- ***Feedthrough mounting***

Direct mounting of the surge protector on the grounded frame at the installation entrance (or on specific bracket see p. 136) :
- perfect connection to the bonding network
- best location (conduction of the surge currents at the entrance of the installation)
- good mechanical withstand.

- ***Alternative mounting***

- connection to the bonding network by wire (4 mm² minimum and shortest length possible).

Standards

IEC 61643-21
UL497C
UL497E

Mounting coaxial surge protectors in feedthrough

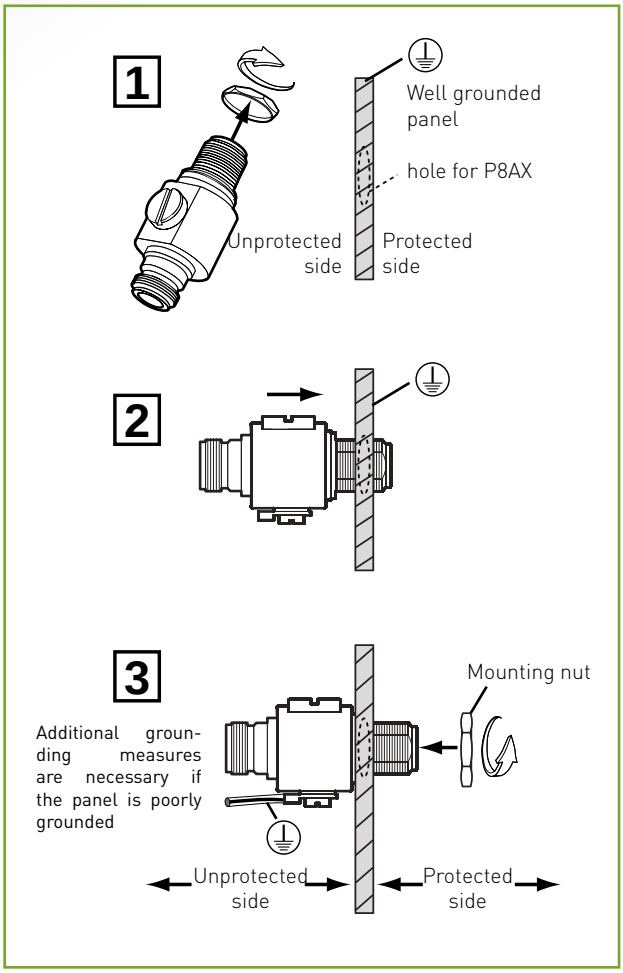

Reference system

CITEL part number	Max. peak power
P8AX09	25 W
P8AX15	70W
P8AX25	190 W
P8AX35	380 W
P8AX50	780 W

CITEL part number	Connectors
P8AX -N	N
P8AX -B	BNC
P8AX - T	TNC
P8AX -716	7/16
P8AX -F	F
P8AX -SMA	SMA

RF Coaxial Protectors - 4 GHz
P8AX series

P8AX09-N/MF

P8AX09-N/MF
(example)

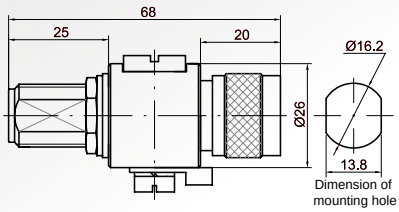

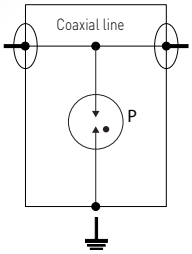

P: 2-electrode gas discharge tube

- **Coaxial surge protector 4 GHz**
- **Low insertion losses**
- **Waterproof**
- **Removable GDT**
- **DC-pass**
- **Bi-directional protection**

P8AX□-□-□

- Type : MF = Male/Female
  FF = Female/Female
- Connectors (see reference system page 126)
- Voltage (see reference system page 126)

Characteristics

CITEL Model		P8AX09*		P8AX25*		P8AX50*	
Description		RF coaxial protector - 4 GHz		Parafoudre coaxial HF- 4 GHz		RF coaxial protector - 4 GHz	
Technology		Gas discharge tube		Gas discharge tube		Gas discharge tube	
Max. frequency	f	DC-4GHz		DC-4GHz		DC-4GHz	
Max Power	P	25 W		190 W		780 W	
Impedance	Z	50 ohms		50 ohms		50 ohms	
Insertion loss		< 0.2dB		< 0.2dB		< 0.2dB	
Return loss		> 20 dB		> 20 dB		> 20 dB	
VSWR		<1.2:1		<1.2:1		<1.2:1	
Max. Load current	IL	10A		10A		10A	
Nominal discharge current *- 8/20µs Test x 10 - C2 Category*	In	5 kA		5 kA		5 kA	
Max. discharge current *-max. withstand @ 8/20 µs by pole*	Imax	20 kA		20 kA		20 kA	
Impulse current *- 2 x 10/350µs Test - D1 Category*	Iimp	2.5 kA		2.5 kA		2.5 kA	
Protection level	Up	< 650 V		< 800 V		<1200 V	
Failsafe behavior		Short-circuit		Short-circuit		Short-circuit	
Mechnical characteristics							
Dimensions		see diagram					
Connection to Network		N . TNC. SMA. F. BNC. 7/16					
Disconnection indicator		transmission interrupt					
Mounting		Feedthrough					
Operating temperature		-40/+85°C					
Protection rating		IP65					
Housing material		Brass/Surface plating : Cu Zn Sn					
Contacts		Bronze/Surface Au-Ag					
Insulation material		PTFE					
RohS compliance		yes					
Spare unit		BBHF-90V		BBHF-250V		BBHF-500V	
Standards compliance		IEC 61643-21 / EN 61643-21 / UL497C / UL497E					
*** Part number**							
BNC connector Female/Female		P8AX09-B/FF	60111	P8AX25-B/FF	60114	P8AX50-B/FF	60117
BNC connector Male/Female		P8AX09-B/MF	60101	P8AX25-B/MF	60104	P8AX50-B/MF	60107
N connector Female/Female		P8AX09-N/FF	60011	P8AX25-N/FF	60014	P8AX50-N/FF	60017
N connector Male/Female		P8AX09-N/MF	60001	P8AX25-N/MF	60004	P8AX50-N/MF	60007
F connector Female/Female		P8AX09-F/FF	60211	P8AX25-F/FF	60214	-	-
F connector Male/Female		P8AX09-F/MF	60201	P8AX25-F/MF	60204	-	-
SMA connector Female/Female		P8AX09-SMA/FF	60511	P8AX25-SMA/FF	60514	P8AX50-SMA/FF	0
SMA connector Male/Female		P8AX09-SMA/MF	60501	P8AX25-SMA/MF	60504	P8AX50-SMA/MF	0
7/16 connector Female/Female		P8AX09-716/MF	60401	P8AX25-716/MF	60404	P8AX50-716/MF	60407
7/16 connector Male/Female		P8AX09-716/FF	60411	P8AX25-716/FF	60414	P8AX50-716/FF	60417

[1] Max. frequency type F : 2 GHz
[2] Impedance for F type connector is 75 ohms

RF Coaxial Protectors - 6 GHz
P8AX-6G series

P8AX09-6G-N/MF

P8AX09-6G-N/FF
(example)

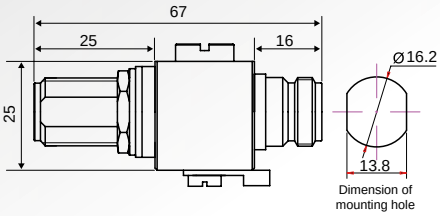

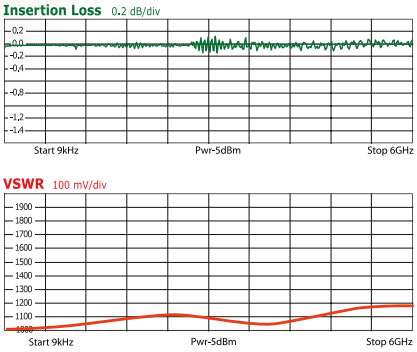

- **Coaxial surge protector 6 GHz**
- **Low insertion losses**
- **Waterproof**
- **Removable GDT**
- **DC-pass**
- **Bi-directional protection**

P8AX ▢-6G-▢-▢

- Type : MF = Male/Female
  FF = Female/Female
- Connectors (see reference system page 126)
- Voltage (see reference system page 126)

Characteristics

CITEL Model		P8AX09-6G*		P8AX25-6G*	
Description		RF coaxial protector - 6 GHz		RF coaxial protector - 6 GHz	
Technology		Gas discharge tube		Gas discharge tube	
Max. frequency	f	DC-6GHz		DC-6GHz	
Max Power	P	25 W		190 W	
Impedance	Z	50 ohms		50 ohms	
Insertion loss		< 0.2dB		< 0.2dB	
Return loss		> 20 dB		> 20 dB	
VSWR		<1.25:1		<1.25:1	
Max. Load current	IL	10A		10A	
Nominal discharge current *- 8/20µs Test x 10 - C2 Category*	In	5 kA		5 kA	
Max. discharge current *-max. withstand ⍵ 8/20 µs by pole*	Imax	20 kA		20 kA	
Impulse current *- 2 x 10/350µs Test - D1 Category*	Iimp	2.5 kA		2.5 kA	
Protection level	Up	< 1100 V		< 2300 V	
Failsafe behavior		Short-circuit		Short-circuit	
Mechnical characteristics					
Dimensions		see diagram			
Connection to Network		N . TNC. SMA			
Disconnection indicator		transmission interrupt			
Mounting		Feedthrough			
Operating temperature		-40/+85°C			
Protection rating		IP65			
Housing material		Brass/Surface plating : Cu Zn Sn			
Contacts		Bronze/Surface Au-Ag			
Insulation material		PTFE			
RohS compliance		yes			
Spare unit		2 x BA HF -90/20		2 x BA HF -150/20	
Standards compliance		IEC 61643-21 / EN 61643-21 / UL497C / UL497E			
*** Part number**					
TNC connector Female/Female		P8AX09-6G-T/FF	68311	P8AX25-6G-T/FF	68314
TNC connector Male/Female		P8AX09-6G-T/MF	68301	P8AX25-6G-T/MF	68304
N connector Female/Female		P8AX09-6G-N/FF	68011	P8AX25-6G-N/FF	68014
N connector Male/Female		P8AX09-6G-N/MF	68001	P8AX25-6G-N/MF	68004
SMA connector Female/Female		P8AX09-6G-SMA/FF	68511	P8AX25-6G-SMA/FF	68514
SMA connector Male/Female		P8AX09-6G-SMA/MF	68501	P8AX25-6G-SMA/MF	68504

RF Coaxial Protectors - 6 GHz
P8AX-VG series

P8AX09-VG-N/MF

P8AX-VG-N/MF

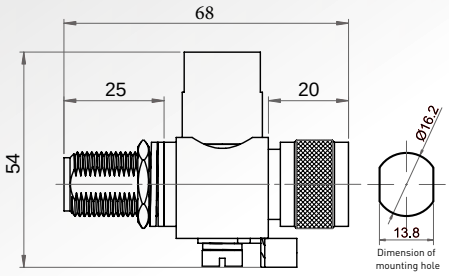

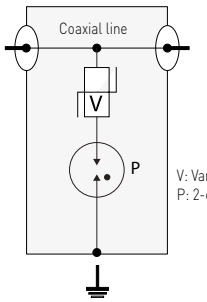

V: Varistor
P: 2-electrode gas tube

- **DC to 6 Ghz**
- **Imax : 6 kA**
- **VSWR ⩽ 1.25**
- **Insertion Loss ⩽ 0.2 dB**
- **Feedthrough mounting**
- **Bi-Directional protection**
- **DC pass**
- **Waterproof**
- **The transmitter does not short-circuit while the surge protector is operating**

Characteristics

CITEL Model		P8AX09-VG-N/MF	P8AX25-VG-F/FF
Description		RF coaxial protector - 6 GHz - VG technology	RF coaxial protector - 6 GHz - VG technology
Technology		VG	VG
Max. frequency	f	DC to 6 GHz	DC to 6 GHz
Max Power	P	25 W	190 W
Impedance	Z	50 ohms	50 ohms
Insertion loss		< 0.2dB	< 0.2dB
Return loss		> 20 dB	> 20 dB
VSWR		⩽ 1.25:1	⩽ 1.25:1
Max. Load current	IL	10A	10A
Nominal discharge current - *8/20µs Test x 10 - C2 Category*	In	3 kA	3 kA
Max. discharge current -*max. withstand (à 8/20 µs by pole*	Imax	6 kA	6 kA
Impulse current - *2 x 10/350µs Test - D1 Category*	Iimp	1 kA	1 kA
Protection level	Up	< 650 V	< 650 V
Failsafe behavior		Short-circuit	Short-circuit
Mechnical characteristics			
Dimensions		see diagram	see diagram
Connection to Network		connector N Male/Female	connector F Female/Female
Disconnection indicator		transmission interrupt	transmission interrupt
Mounting		Feedthrough	Feedthrough
Operating temperature		-40/+85°C	-40/+85°C
Protection rating		IP65	IP65
Housing material		Brass/Surface plating : Cu Zn Sn	Brass/Surface plating : Cu Zn Sn
Contacts		Bronze/Surface Au-Ag	Bronze/Surface Au-Ag
Insulation material		PTFE	PTFE
RohS compliance		yes	yes
Spare unit		-	-
Standards compliance		IEC 61643-21 / EN 61643-21 / UL497C / UL497E	IEC 61643-21 / EN 61643-21 / UL497C / UL497E
Part number		60601	60701

«Quarter-Wave» Coaxial Protectors
PRC series

PRC1800-716/MF

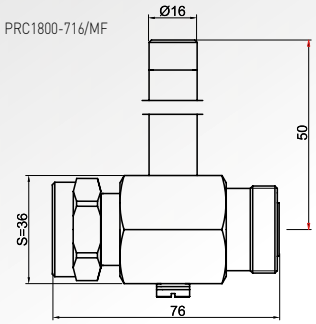

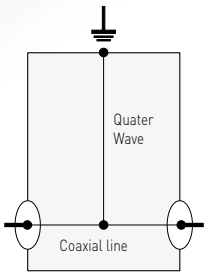

- **Low insertion losses**
- **Imax > 50 kA**
- **Available for wide-band application**
- **No maintenance**

PRC□-□□-□

- Type : MF = Male/Female
  FF = Female/Female
- Mounting : " " = on connector
  W = on feedthrough
- Connectors (see reference system page page 126)
- Voltage (see reference system pagepage 126)

Characteristics

CITEL Model		PRC822S*		PRC900*		PRC1800*		PRC2100*		PRC5800*	
Description		"Quarter wave" coaxial protector		"Quarter wave" coaxial protector		"Quarter wave" coaxial protector		"Quarter wave" coaxial protector		"Quarter wave" coaxial protector	
Technology		Quarter Wave		Quarter Wave		Quarter Wave		Quarter Wave		Quarter Wave	
Max. frequency	f	800-2200MHz		870-960MHz		1700-1950MHz		1800-2400MHz		4500-6000MHz	
Max Power	P	1500 W (7/16 = 2500 W)		1500 W (7/16 = 2500 W)		1500 W (7/16 = 2500 W)		1500 W		1500 W	
Impedance	Z	50 ohms		50 ohms		50 ohms		50 ohms		50 ohms	
Insertion loss		< 0.2dB		< 0.2dB		< 0.2dB		< 0.2dB		< 0.2dB	
Return loss		> 20 dB		> 20 dB		> 20 dB		> 20 dB		> 20 dB	
VSWR		<1.2:1		<1.2:1		<1.2:1		<1.2:1		<1.2:1	
Max. Load current	IL	10A		10A		10A		10A		10A	
Nominal discharge current *8/20µs Test x 10 - C2 Category*	In	25 kA		50 kA		50 kA		25 kA		25 kA	
Max. discharge current *-max. withstand (Ø 8/20 µs by pole*	Imax	50 kA		100 kA		100 kA		50 kA		50 kA	
Impulse current *2 x 10/350µs Test - D1 Category*	Iimp	25 kA		50 kA		50 kA		25 kA		25 kA	
Protection level	Up	< 30 V		< 30 V		< 30 V		< 30 V		< 30 V	
Failsafe behavior		without		without		without		without		without	
Mechnical characteristics											
Dimensions		see diagram									
Connection to Network		N or 7/16 connector		N, TNC or 7/16 connector		N, TNC or 7/16 connector		N connector		N connector	
Mounting		on connector or feedthrough (W version)								connector	
Operating temperature		-40/+85°C									
Protection rating		IP65									
Housing material		Brass/Surface plating : Cu Zn Sn									
Contacts		Bronze/Surface Au-Ag									
Insulation material		PTFE									
Standards compliance		IEC 61643-21 / EN 61643-21 / UL497C / UL497E									
*** Part number**											
N connector Female/Female		PRC822S-N/FF	61013	PRC900-N/FF	621124	PRC1800-N/FF	621125	PRC2100-N/FF	-	PRC5800-N/FF	621151
N connector Male/Female		PRC822S-N/MF	61003	PRC900-N/MF	621111	PRC1800-N/MF	621112	PRC2100-N/MF	621183	PRC5800-N/MF	621112
N connector Female/Female - Feedthrough mounting		-	-	-	-	-	-	PRC2100-NW/FF	621172	-	-
N connector Male/Female - Feed-through mounting		-	-	-	-	PRC1800-NW/MF	61108	PRC2100-NW/MF	-	-	-
T connector Female/Female		-	-	PRC900-T/FF	621126	PRC1800-T/FF	621127	-	-	-	-
T connector Male/Female		-	-	PRC900-T/MF	621113	PRC1800-T/MF	621115	-	-	-	-
7/16 connector Female/Female		PRC822S-716/MF	621139	PRC900-716/MF	621110	PRC1800-716/MF	621108	-	-	-	-
7/16 connector Male/Female		PRC822S-716/FF	67413	PRC900-716/FF	621109	PRC1800-716/FF	621107	-	-	-	-

Coaxial surge protector
CNP and CXP series

CXP09-NW/FF-DCB

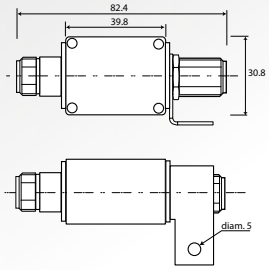

CNP

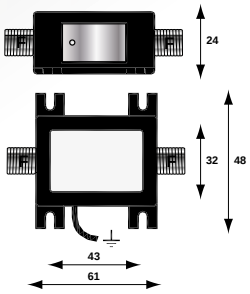

CNP
CXP

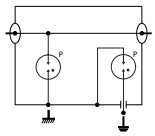

CXP-DCB

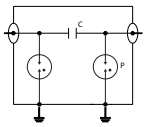

P : Gas discharge tube
C : Capacitance

- **Coaxial surge protector low frequency**
- **RoHS 6 compliance**
- **Waterproof**
- **Mounting on plate**
- **Bi-directional**

Characteristics

CITEL Model		CNP90TV-F/FF	CNP230TV-F/FF	CXP09*	CXP25*	CXP09*-DCB	CXP25*-DCB
Description		Coaxial SPD for video transmission networks	Coaxial SPD for video transmission networks	Coaxial SPD low frequency	Coaxial SPD low frequency	Coaxial SPD low frequency	Coaxial SPD low frequency
Technology		Gas discharge tube	Gas discharge tube	Gas discharge tube	Gas discharge tube	GDT+Filter	GDT+Filter
Max. frequency	f	DC-1 GHz	DC-1 GHz	DC-1 GHz	DC-1 GHz	125-1000 MHz	125-1000 MHz
Max Power	P	25 W	190 W	25 W	190 W	25 W	190 W
Impedance	Z	50/75 ohms	50/75 ohms	50/75 ohms	50/75 ohms	50/75 ohms	50/75 ohms
Insertion loss		< 0.6 dB	< 0.6 dB	< 0.5 dB	< 0.5 dB	< 1 dB	< 1 dB
Return loss		> 20 dB	> 20 dB	> 18 dB	> 18 dB	> 20 dB	> 20 dB
VSWR		< 1.35:1	< 1.35:1	< 1.3:1	< 1.3:1	<1.3:1	<1.3:1
Max. Load current	IL	0.5 A	0.5 A	0.5 A	0.5 A	0.5 A	0.5 A
Nominal discharge current *8/20µs Test x 10 - C2 Category*	In	5 kA	5 kA	5 kA	5 kA	5 kA	5 kA
Max. discharge current *-max. withstand @ 8/20 µs by pole*	Imax	20 kA	20 kA	20 kA	20 kA	20 kA	20 kA
Impulse current *2 x 10/350µs Test - D1 Category*	Iimp	2.5 kA	2.5 kA	2.5 kA	2.5 kA	2.5 kA	2.5 kA
Protection level	Up	600 V	600 V	600 V	600 V	600 V	600 V
Failsafe behavior		Short-circuit	Short-circuit	short-circuit	short-circuit	short-circuit	short-circuit
Mechnical characteristics							
Dimensions		see diagram					
Connection to Network		Connector F. female/female		N or F connector		N or F connector	
Disconnection indicator		transmission interrupt					
Mounting		on plate					
Operating temperature		-40/+85°C					
Protection rating		IP20		IP20			
Housing material		Metal+plastic		Brass			
Standards compliance		IEC 61643-21 / EN 61643-21 / UL497C / UL497E					
***Part number**							
N connector Female/Female		- -	- -	CXP09-N/FF 631655	CXP25-N/FF -	CXP09-N/FF-DCB 631652	CXP25-N/FF-DCB 631652
N connector Male/Female		- -	- -	CXP09-N/MF -	CXP25-N/MF 631754	CXP09-N/MF-DCB 631653	CXP25-N/MF-DCB 631653
F connector Female/Female		CNP90TV-F/FF 6329012	CNP230TV-F/FF 632302	CXP09-F/FF 631651	CXP25-F/FF 631757	- -	- -
F connector Male/Female		CNP90TV-F/MF 6329011	- -	CXP09-F/MF 631611	CXP25-F/MF -	- -	- -

Bracket for coaxial surge protector

- **Screw fixing**
- **Grounding**
- **Requires a feedthrough connector**

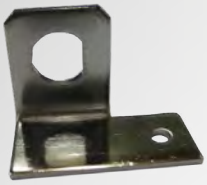

BK-T
bracket for TNC connector

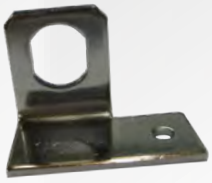

BK-N
bracket for N connector

BK-SMA
bracket for SMA connector

Mounting bracket

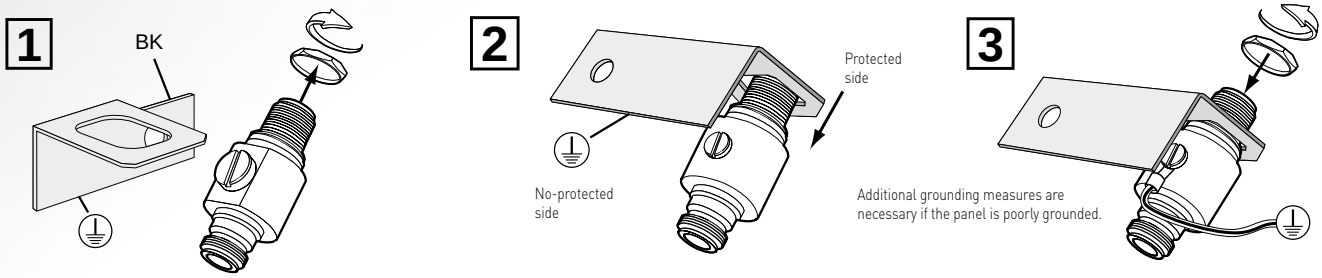

Reference braket

CITEL	Part number	Connection
BK-D	66001	7/16
BK-F	66002	F
BK-N	66003	N
BK-SMA	66006	SMA
BK-T/BK-B	66007	BNC and TNC

Gas discharge tube

- **GDT for maintenance of coaxial surge protectors P8AX**
- **Adapted for use in very high frequency**
- **Selection according to the RF signal power**

CITEL P/N	Part number	Packaging	P8AX reference
BBHF 90/20	927000107	Packing*10	P8AX09-xxx
BBHF 150/20	927000207	Packing*10	P8AX15-xxx
BBHF 250/20	927005907	Packing*10	P8AX25-xxx
BBHF 350/15	927006507	Packing*10	P8AX35-xxx
BBHF 500/20	927002207	Packing*10	P8AX50-xxx
BAHF 90/20	927100107	Packing*10	P8AX09-6G
BAHF 150/20	927100207	Packing*10	P8AX 25-6G

BB HF

CITEL

GAS DISCHARGE TUBE

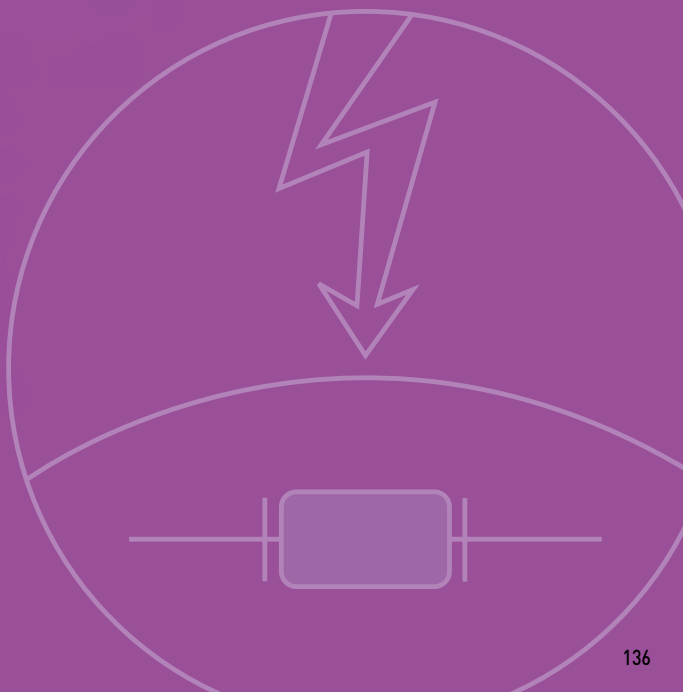

Gas Discharge Tubes

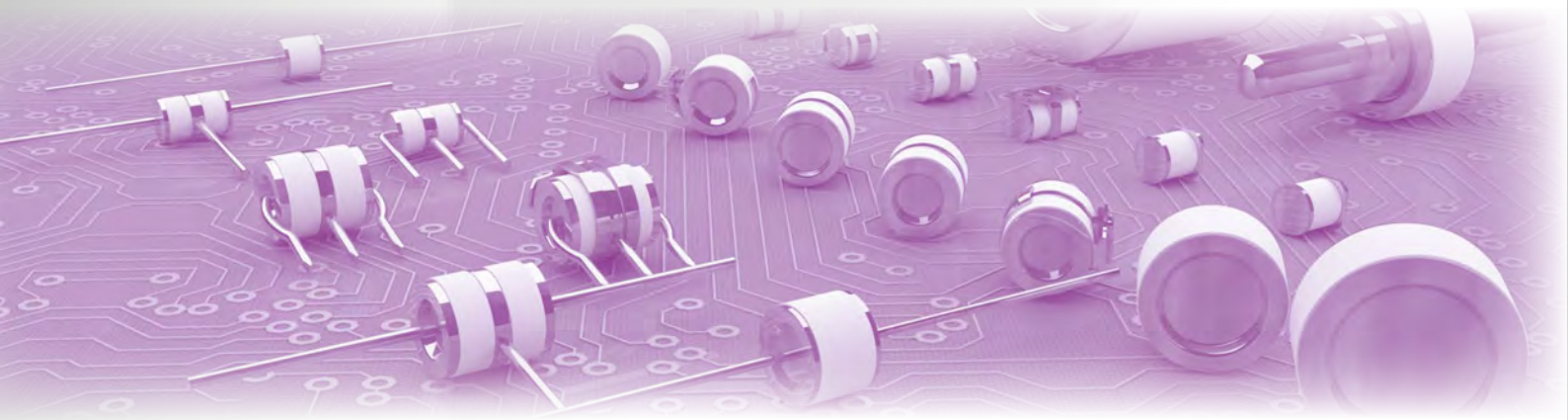

The Gaz Discharge Tube (or GDT) are passive components made of two or three electrodes in an enclosure filled with a (non-radioactive) rare gas at a controlled pressure.
The enclosure is a ceramic tube with its ends closed off by metal caps that also serve as electrodes.
Their main use is to protect telecommunications lines, but other uses are possible.

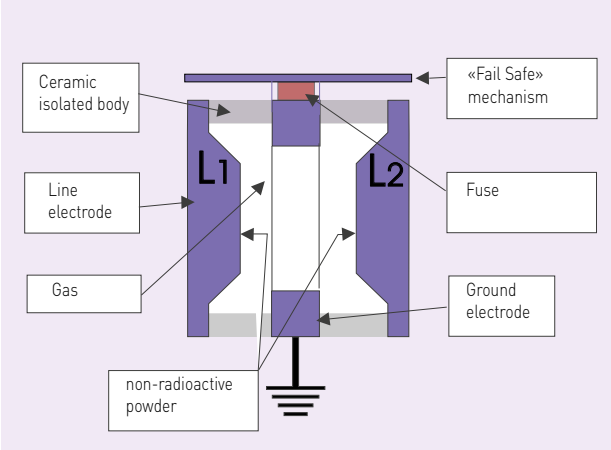

Operation

The gas discharge tube may be regarded as a sort of very fast switch having conductance properties that change very rapidly, when breakdown occurs, from open-circuit to quasi-short circuit (arc voltage about 20V). There are accordingly four operating domains in the behavior of a gas discharge tube:

- Non-operating domain, characterized by practically infinite insulation resistance;
- Glow domain : At breakdown, the conductance increases suddenly; if the current drained off by the gas tube is less than about 0.5A (this is a rough value that differs according to the type of component), the glow voltage across the terminals will be in the 80-100V range;
- Arc regime : as the current increases, the gas discharge tube shifts from the glow voltage to the arc voltage (20V). It is in this domain that the gas discharge tube is most effective, because the current discharged can reach several thousand amperes without the arc voltage across its terminals increasing.
- Extinction : At a bias voltage roughly equal to the glow voltage, the gas tube recovers its initial insulating properties.

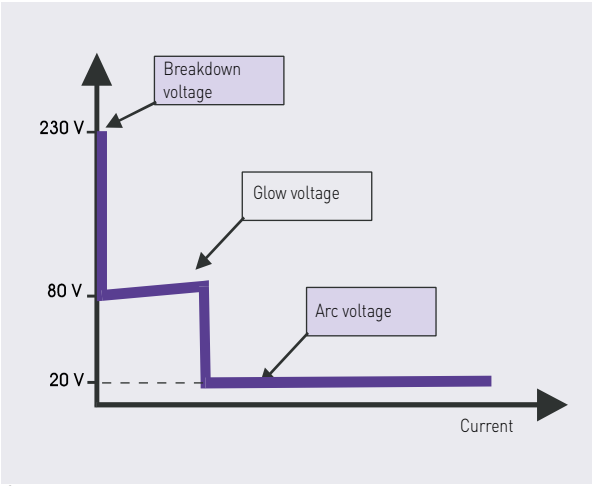

Operating regimes

Electrical characteristics

The main electrical characteristics defining a gas discharge tube are:

- DC sparkover voltage (Volts)
- Impulse sparkover voltage (Volts)
- Discharge current capacity (kA)
- Insulation resistance (Gohms)
- Capacitance (pF).

DC sparkover voltage

This is the main characteristic defining the gas discharge tube.
It is the voltage at which breakdown will occur between the electrodes when a slowly increasing voltage (dV/dt = 100 V/s) is applied to the component; it depends on the electrode spacing, the pressure, and the properties of the gas mixture and of the emissive substance.

Range of DC sparkover voltages available:

- minimum 75V
- average 230V
- high voltage 500V
- very high voltage 1000 to 3000V

The tolerance on the breakdown voltage is generally ± 20%. .

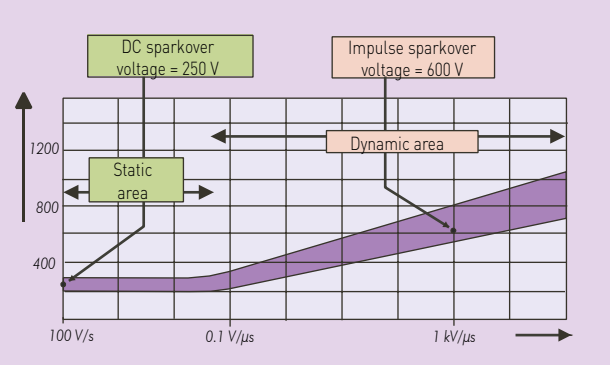

DC and Impulse sparkover voltages

ischarge current

This depends on the properties of the gas, the volume, and the material and treatment of the electrodes. It is the major characteristic of the GDT and the one that distinguishes it from other protection devices (Varistor, Zener diode, etc.): 5 to 20kA with an 8/20µs impulse for the standard components. This is the value the device can withstand repeatedly (say for ten impulses) without destruction or alteration of its basic specifications.

Impulse sparkover voltage

Sparkover voltage in the presence of a steep rise front (dV/dt = 1kV/µs): the impulse sparkover voltage increases with increasing dV/dt.

Insulation resistance and capacitance

These characteristics make the gas discharge tube practically «invisible» in a line in a steady-state context: insulation resistance very high (>10 Gohm), capacitance very low (<1 pF).

3-electrode configuration

Protecting a two-wire line (for example a telephone pair) with two 2-electrode gas discharge tubes (connected between the wires and ground) may cause the following problem:
The line is subjected to an overvoltage in common mode; because of the dispersion of the sparkover voltages (± 20%), one of the gas discharge tubes sparks over a very short time before the other (a few microseconds); the wire that has sparked over is therefore grounded (neglecting the arc voltages), turning the common-mode overvoltage into a differential-mode overvoltage, very dangerous for the terminal equipment. This risk disappears when the second gas discharge tube arcs over (a few microseconds later).
3-electrode gas tube geometry eliminates this drawback: the sparkover of one pole causes a «general» breakdown of the device almost instantaneously (a few nanoseconds) because there is only one gas-filled enclosure.

End of life

Gas discharge tubes are designed to withstand several impulses without destruction or loss of the initial characteristics (typical impulse tests: 10 times 5 kA impulses of each polarity).
On the other hand, a sustained strong current (e.g. 10 A rms for 15 seconds, simulating the fall of a AC power line onto a telecommunication line) will put the device out of service definitively.
If a fail-safe end of life is desired (i.e. a short-circuit that will report the fault to the user when the line fault is detected), gas discharge tubes with the fail-safe feature (external short-circuit) should be chosen.

Standards

CITEL gas discharge tubes comply with the specifications of main telecom operators and with the ITU-T K12 international recommendation and standards IEC 61643-311.
CITEL gas discharge tubes are also compliant with the RoHS Directive

Gas Discharge Tubes

Mechanical characteristics

CITEL gas discharge tubes are available in several mechanical configurations to adapt to the desired set-up:

- Bare version for mounting adapted support
- "S" version wire output (diameter 0.8 or 1 mm) for mounting on printed circuit
- "SMD" version for surface mounting, with optional "SQ" version (anti-roll square electrode).
- Specific versions: output by cable or rod

Surface mounting

Most of CITEL range of gas discharge tubes are available for surface mounting (SMD), with optional "anti-rolling" version with square electrode (SQ). The welding profile with reflow must follow the recommended curve (opposite).

The 3-poles BMSQ CMS FL gas tube is particularly adapted to surface-mount technology, with its "anti-rolling" electrode and its exclusive external short-circuit system adapted to this type of mounting.

Printed circuit mounting

The majority of CITEL gas discharge tube ranges are available with wire output (diameter 0.8 or 1 mm) for mounting on a printed circuit board. Different types of output possible according to the range: axial, radial, straight output, folded output..... Wave solder mounting must be done following the recommended profile (opposite)

Radial Taping

The CITEL gas discharge tubes with wire output are provided in a radial tape in a pack of 500 components according to the ranges (plan opposite) and in line with the IEC 286-1 specification.

Tape and Reel

The CITEL gas discharge tubes with SMT mounting are provided in a Tape and Reel pack, reel of 500, 800 or 1000 components (plan opposite) and in line with the IEC 286-1 specification

The CITEL line

CITEL proposes a full line of gas discharge tubes to meet most configuration needs and specifications found on the market :

- 2- and 3-electrode gas discharge tubes
- Sparkover voltages from 75 to 3000 V
- Discharge capacities from 5 to 150 kA (8/20µs)
- Optional external short-circuit device
- Installation on support, on printed circuit, or surface-mounted devices.

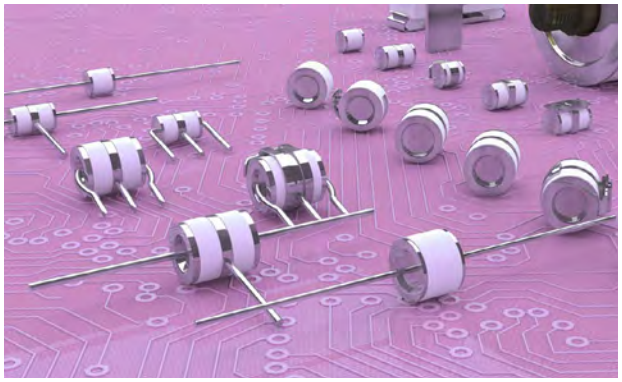

GSG series

Thanks to our inherent knowledge and experience in the field of gas discharge tubes, CITEL has developed a specific technology:
GSG (**G**as-filled **S**park **G**ap).
These components are designed to be used on an AC network: they have an increased extinction capability and a higher current discharge capability with either a 8/20us or 10/350us waveform.
The GSG components are the heart of the VG technology which insures matching performance with allair gap technologies without any of downside.

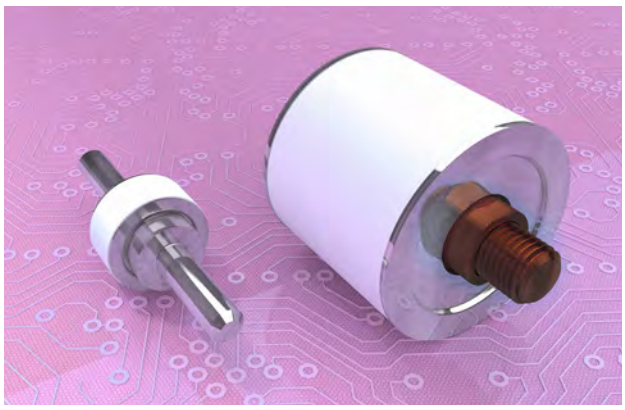

Welding curve by reflow for SMT gas discharge tubes

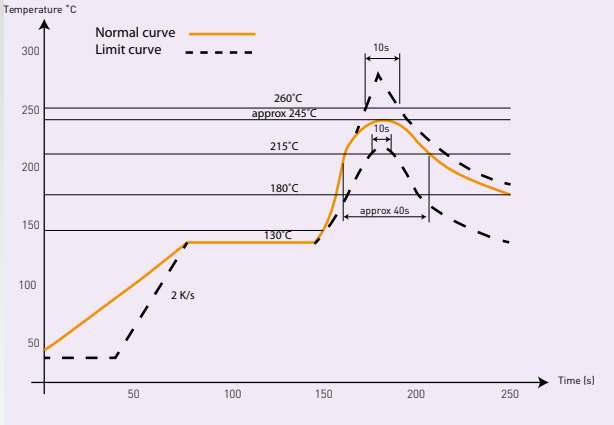

Wave soldering cycle for gas discharge tubes

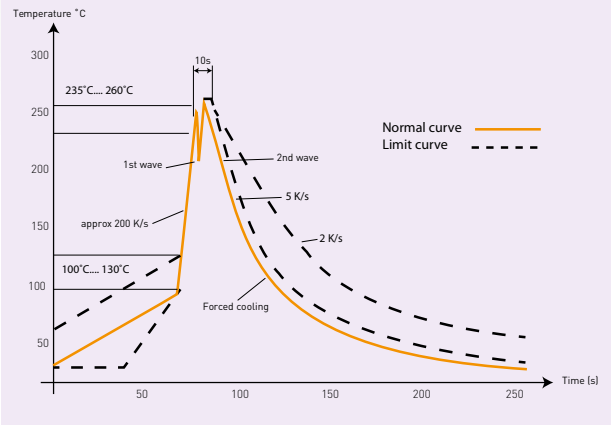

Radial Taping layout for gas discharge tubes with wire output (IEC 286-1)

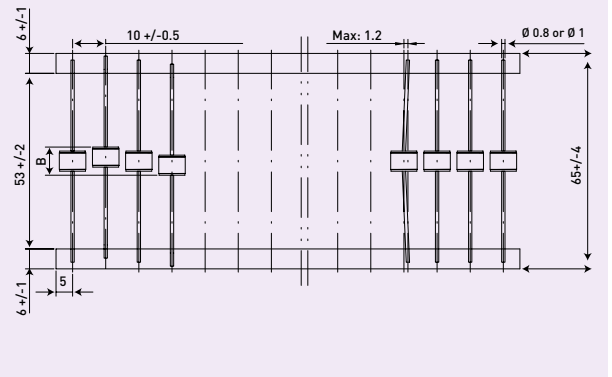

Tape & Reel for gas discharge tubes with SMD mounting (IEC 286-3)

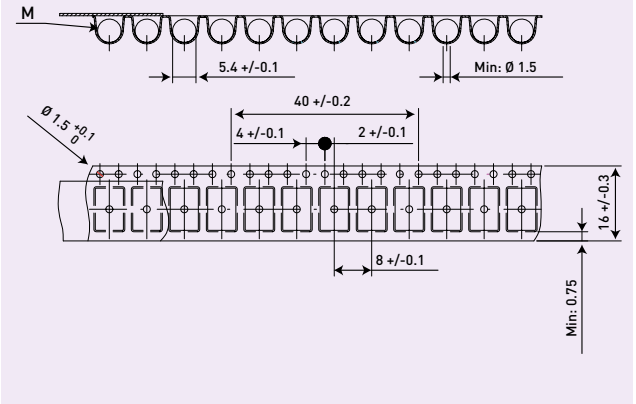

Selection guide

2-ELECTRODE

Range	CITEL model	DC sparkover voltage (100V/s)	Impulse sparkover voltage (1kV/µs)	Insulation resistance (100Vdc)	Capacitance	Holdover voltage (R = 300 ohms in serie R = 150 ohms; 100nF in parrallel)	AC dsicharge current (50Hz)	Max. discharge current (8/20µs ; 1 fois)	Nominal discharge current (8/20µs ; 10 fois)	Mechanical
BH	**BH75**	65-95 V	<620 V	>10GΩ	<0.8 pF	>60 V	20 A	30 kA	15 kA	
	BH90	72-108 V	<580 V	>10GΩ	<0.8 pF	>80 V	20 A	40 kA	20 kA	
BH	**BH230**	184-276 V	<700 V	>10GΩ	<0.8 pF	>80 V	20 A	40 kA	20 kA	
	BH350	280-420 V	<850 V	>10GΩ	<0.8 pF	>80 V	20 A	40 kA	20 kA	
	BH470	376-564 V	<1000 V	>10GΩ	<0.8 pF	>80 V	20 A	40 kA	20 kA	
BH > 1000V	**BH500**	400-600 V	<1200 V	>10GΩ	<0.8 pF	>80 V	20 A	40 kA	20 kA	
	BH600	480-720 V	<1200 V	>10GΩ	<0.8 pF	>80 V	20 A	40 kA	20 kA	
BHSQ	**BH800**	640-690 V	<1400 V	>10GΩ	<0.8 pF	>80 V	10 A	25 kA	10 kA	
	BH1400	1120-1680 V	<2100 V	>10GΩ	<0.8 pF	>120 V	10 A	25 kA	10 kA	
	BH1500	1200-1800 V	<2300 V	>10GΩ	<0.8 pF	>120 V	10 A	25 kA	10 kA	
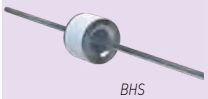 BHS	**BH2500**	2000-3000 V	<3800 V	>10GΩ	<0.8 pF	>120 V	10 A	25 kA	10 kA	
	BH3000	2400-3600 V	<4600 V	>10GΩ	<0.8 pF	>120 V	10 A	25 kA	10 kA	
CA8BC	**CA8BC-230**	184-276 V	<1000 V	>1GΩ	<10 pF	>72 V	20 A	25 kA	10 kA	
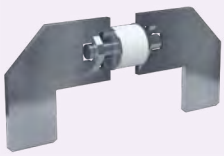	CA8BC-250	220-280 V	<1000 V	>1GW	<10 pF	>72 V	20 A	25 kA	10 kA	
	CA8BC-350	280-420 V	<1000 V	>1GW	<10 pF	>72 V	20 A	25 kA	10 kA	
CA8BB	CA8BB-250	220-280 V	<750 V	>1GW	<10 pF	>72 V	20 A	25 kA	10 kA	
	CA8BB-300	240-360 V	<800 V	>1GW	<10 pF	>72 V	20 A	25 kA	10 kA	

RoHS

BH

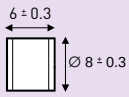

BHSQ CMS

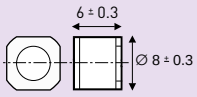

BHS

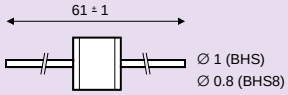

Options :
- Lead termination(Ø 1 ou 0.8 mm) : **BHS** or **BHS8**
- BHS Tape & Reel : 500 p.
- External short-circuit: **BHC**
- Square electrode/ SMD : **BHSQ CMS**
- BHSQ CMS Tape & Reel : 500 p.

CA8BC

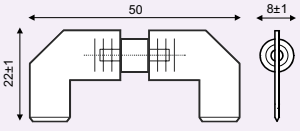

CA8BB

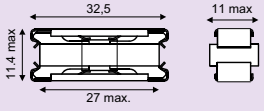

Selection guide

2-ELECTRODE

Range	CITEL model	DC sparkover voltage (100V/s)	Impulse sparkover voltage (1kV/µs)	Insulation resistance (100Vdc)	Capacitance	Holdover voltage (R = 300 ohms in serie R = 150 ohms; 100nF in parrallel)	AC dsicharge current (50Hz)	Max. discharge current (8/20µs ; 1 fois)	Nominal discharge current (8/20µs ; 10 fois)	Mechanical
BA	**BA75**	65-95 V	<640 V	>10GΩ	<0.3 pF	>60 V	10 A	25 kA	10 kA	
BA	**BA90**	72-108 V	<600 V	>10GΩ	<0.3 pF	>60 V	10 A	25 kA	10 kA	
BASQ	**BA150**	120-180V	<700 V	>10GΩ	<0.3 pF	>80 V	10 A	25 kA	10 kA	
BAC	**BA230**	184-276 V	<700 V	>10GΩ	<0.3 pF	>80 V	10 A	25 kA	10 kA	
	BA300	240-360 V	<900 V	>10GΩ	<0.3 pF	>80 V	10 A	25 kA	10 kA	
BAS	**BA350**	280-420 V	<900 V	>10GΩ	<0.3 pF	>80 V	10 A	25 kA	10 kA	
	BA550	440-660 V	<1200 V	>10GΩ	<0.3 pF	>80 V	10 A	25 kA	10 kA	
BB	**BB75**	65-95 V	<620 V	>10GΩ	<0.8 pF	>60 V	10 A	25 kA	10 kA	
BB	**BB90**	72-108 V	<580 V	>10GΩ	<0.8 pF	>60 V	10 A	25 kA	10 kA	
	BB150	120-180 V	<640 V	>10GΩ	<0.8 pF	>75 V	10 A	25 kA	10 kA	
BBC	**BB230**	184-276 V	<700 V	>10GΩ	<0.8 pF	>80 V	10 A	25 kA	10 kA	
	BB350	280-420 V	<850 V	>10GΩ	<0.8 pF	>80 V	10 A	25 kA	10 kA	
BBS	**BB500**	400-600 V	<1200 V	>10GΩ	<0.8 pF	>80 V	10 A	25 kA	10 kA	
	BB600	480-720 V	<1200 V	>10GΩ	<0.8 pF	>80 V	10 A	25 kA	10 kA	

BA

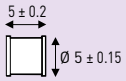

BASQ CMS

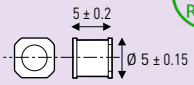

BAS

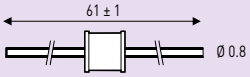

Options
- Lead termination: **BAS**
- External short-circuit: **BAC**
- SMD version: **BASQ CMS** (Square electrode) and **BA CMS**
- BAS Tape & Reel : 800 p.
- BASQ CMS and BA CAM : 1000p

BB

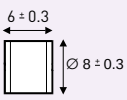

BBC

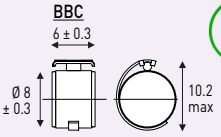

BBS

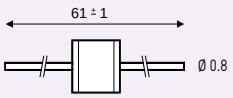

Options
- Lead termination: **BBS**
- External short-circuit: **BBC**
- BBS Tape & Reel : 500p.

Selection guide

3-ELECTRODE

Range	CITEL model	DC sparkover voltage (100V/s)	Impulse sparkover voltage (1kV/µs)	Insulation resistance (100Vdc)	Capacitance	Holdover voltage (R = 300 ohms in serie R = 150 ohms; 100nF in parrallel)	AC dsicharge current (50Hz)	Max. discharge current (8/20µs ; 1 fois)	Nominal discharge current (8/20µs ; 10 fois)	Mechanical
BT	BT90	72-108 V	<620 V	>10GΩ	<0.9 pF	>70 V	20 A	25 kA	20 kA	
BT	BT150	120-180 V	<600 V	>10GΩ	<0.9 pF	>80 V	20 A	25 kA	20 kA	
	BT230	184-276 V	<680 V	>10GΩ	<0.9 pF	>80 V	20 A	25 kA	20 kA	
BTC	BT350	280-420 V	<800 V	>10GΩ	<0.9 pF	>80 V	20 A	25 kA	20 kA	
	BT500	400-600 V	<1100 V	>10GΩ	<0.9 pF	>80 V	20 A	25 kA	20 kA	
BTR										
BTS										
BM	BM90	72-108 V	<560 V	>10GΩ	<0.5 pF	>60 V	10 A	25 kA	10 kA	
BM	BM150	120-180 V	<600 V	>10GΩ	<0.5 pF	>80 V	10 A	25 kA	10 kA	
	BM230	184-276 V	<680 V	>10GΩ	<0.5 pF	>80 V	10 A	25 kA	10 kA	
BMSQ CMS FL	BM350	280-420 V	<900 V	>10GΩ	<0.5 pF	>80 V	10 A	25 kA	10 kA	
	BM500	400-600 V	<1100 V	>10GΩ	<0.5 pF	>80 V	10 A	25 kA	10 kA	
BM SQ										
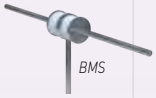 BMS										
BMS5										

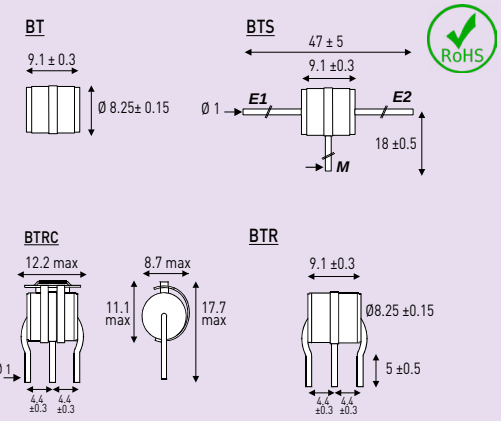

Options
- Axial wire output: **BTS**
- Radial wire output: **BTR**
- External short-circuit: **BTC, BTRC,**

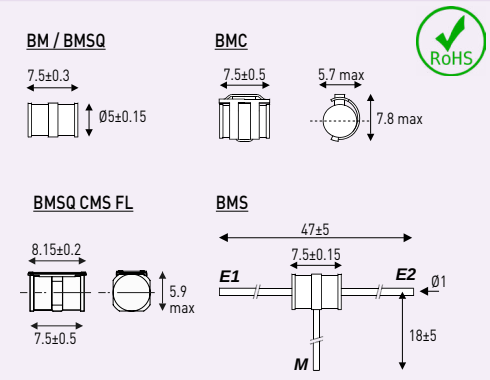

Options
- Lead termination: **BMS, BMS5**
- External short-circuit: **BMC, BM..FL**
- SMD : **BMSQ CMS** (Square electrode) and **BM CMS**
- Tape & Reel CMS : 1000 p.

Selection guide

GSG

Range	CITEL part number	DC sparkover voltage (100V/s)	Impulse sparkover voltage (1.2/50µS / 6kV)	Insulation resistance (100Vdc)	Follow current interrupting capability (Ifi) (under voltage AC)	Nominal discharge current (In) 8/20µs, following IEC 61643-11)	Max. discharge current (Imax) (8/20µs ; following IEC 61643-11°)	Max. impulse current (Iimp) (10/350µs ; following IEC 61643-11)	Mechanical
BG	BG600	450-800V	<1500 V	>10GΩ	> 100 A	60 kA	100 kA	15 kA	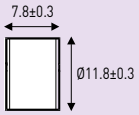
	BG800	650-1000 V	<1500 V	>10GΩ	> 100 A	60 kA	100 kA	15 kA	
	BG1000	850-1200 V	<1800 V	>10GΩ	> 100 A	60 kA	100 kA	15 kA	
	BG1300	1100-1600 V	<2000V	>10GΩ	> 100 A	60 kA	100 kA	15 kA	
BF	BF800	650-1000 V	<1500 V	>10GΩ	> 100 a	80 kA	150 kA	50 kA	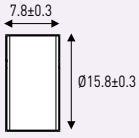
	BF1300	1100-1600 V	<2500 V	>10 GΩ	> 100 A	80 kA	150 kA	50 kA	

GSG (IEC 61643-11)

Range	CITEL part number	DC sparkover voltage (100V/s)	Impulse sparkover voltage (1.2/50µS / 6kV)	Insulation resistance (100Vdc)	Nominal discharge current (In) 8/20µs, suivant IEC 61643-11)	Max. discharge current (Imax) (8/20µs ; suivant IEC 61643-11)	Max. impulse current (Iimp) (10/350µs ; suivant IEC 61643-11)	Mechanical
BF P100	BFP100-230	184-276 V	<900 V	>10 GΩ	80 kA	150 kA	50 kA	BF P100 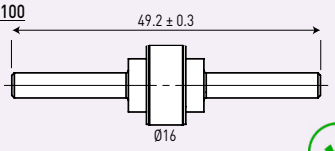
	BFP100-250	200-300 V	<900 V	>10 GΩ	80 kA	150 kA	50 kA	
	BFP100-350	280-420 V	<1000 V	>10 GΩ	80 kA	150 kA	50 kA	
	BFP100-500	400-600 V	<1200 V	>10 GΩ	80 kA	150 kA	50 kA	
	BFP100-600	480-720 V	<1300 V	>10 GΩ	80 kA	150 kA	50 kA	
	BFP100-750	600-900 V	<1500 V	>10 GΩ	80 kA	150 kA	50 kA	BF PS 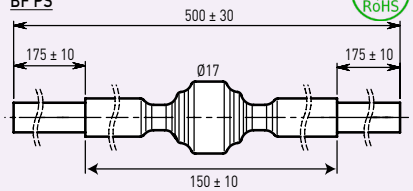
BE 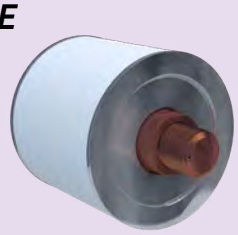	BE 800	650-1000 V	<1500 V	>1 GΩ	100 kA	150 kA	100 kA	BE 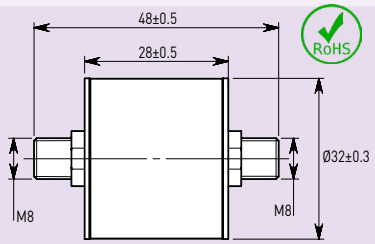

CITEL

MISCELLANEOUS OBSTRUCTIONS LIGHTS

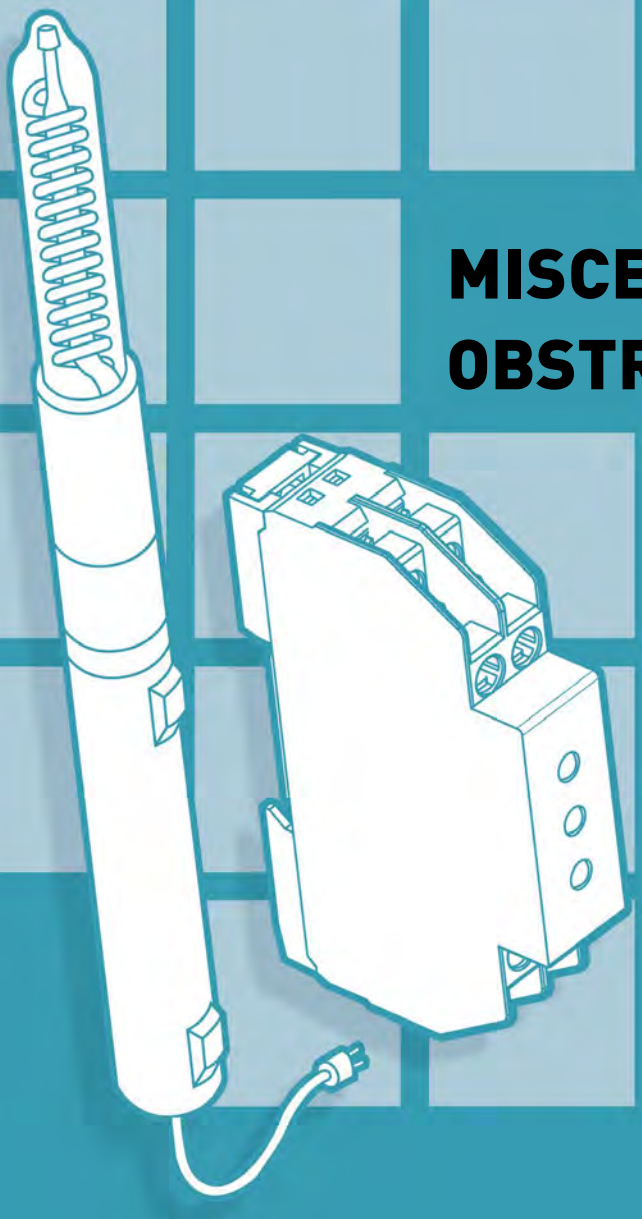

Automatic AC voltage monitoring relay
VMxxx-DIN

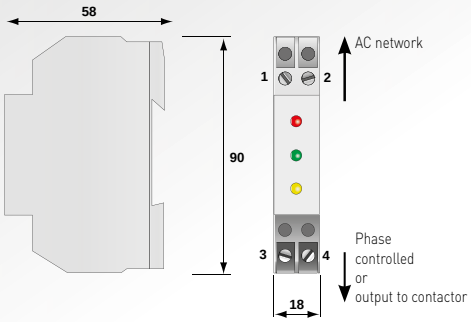

- **Protection against over / under voltage of AC network**
- **Automatic operation**
- **re-engagement delayed**
- **Operating indicators**
- **Easy installation on DIN rail**
- **Compliance with EN 50550**

VMxxx -DIN

Operating voltage

Characteristics

CITEL model	VM230-DIN	VM120-DIN
AC network	230 V single phase	120 V single phase
Voltage range OK	195 V up to 270 Vac	95 V up to 140 Vac
Disconnection undervoltage	< 195 Vac	< 95 Vac
Disconnection overvoltage	> 270 Vac	> 140 Vac
Disconnection delay	1 second (typical)	
Reset delay	1 second (typical)	
Output controlled	1 T / 5 A @ 250 V	
Status indication by leds	yellow : undervoltage (disconnection) green : correct voltage red : overvoltage (disconnection)	
Format	DIN box 1 module of 18 mm	
Standards compliance	EN 50550	
Part number	3569013	3569012

CE

Installation

Nominal line current < 5A

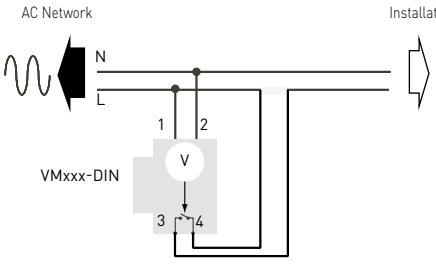

Nominal line current > 5A

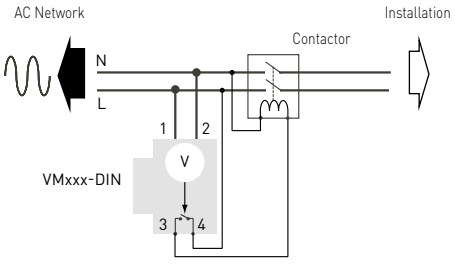

Isolating Spark Gaps
BF P and SGP

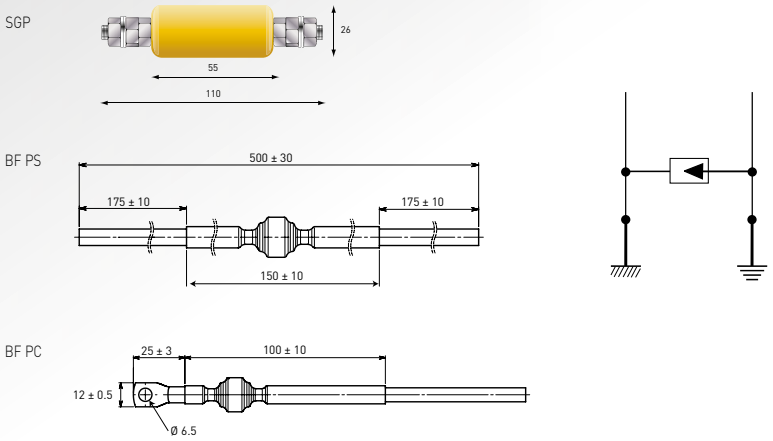

- **Isolating Spark gaps**
- **Outdoor or indoor application**
- **Discharge currents up to 150 kA**
- **Compliance wiht EN 62561-3**

Characteristics

CITEL Model		**BF P***	**SGP70**	**SGP40**
Description		Isolating spark gap	Isolating spark gap	Isolating spark gap
Technology		Gas discharge tube	Gas discharge tube	Gas discharge tube
DC sparkover voltage *(100V/s)*		400-600 V	600-900 V	600-900 V
Impulse sparkover voltage *(1kV/µs)*		< 1200 V	< 1500 V	< 1500 V
Max. discharge current *-max. withstand (ß 8/20 µs*	Imax	150 kA	70 kA	40 kA
Impulse current *- max. withstand 10/350µs*	Iimp	50 kA	25 kA	10 kA
Mechnical characteristics				
Dimensions		see diagram		
* Connection to Network		wire (BF PS) wire terminal (BF PC)	threaded rod M10	threaded rod M10
Operating temperature		-40/+85°C		
Outdoor application		yes		
Protection rating		IP67	IP54	IP54
Standards compliance		EN 62561-3		
Part number		BF PC 500/20 : 90231522 BF PS 500V : 90231622	690103	690102

Lightning Current Counter
LSC-A

Installation

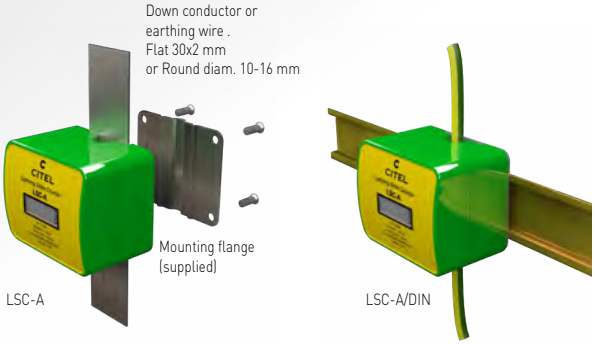

- **Lightning current counter**
- **For LPS and SPD**
- **Outdoor or indoor application**
- **Mounting on conductor or DIN rail**
- **Compliance with EN 62561-6**

Characteristics

CITEL model	LSC-A
Description	Lightning current counters outdoor or indoor
Minimum current sensibility	0.5 kA
Max. admissible impulse current	100 kA
Maximum numbers of events	999999
Type d'affichage	LCD
Dimensions	66 x 55 x 47 mm
Weight	0,14 kg
Enclosure	Thermoplastic UL94-V0
Power supply	internal by battery
Life expectancy (before battery replacement)	> 10 years
Mounting	by flange on round (diam. 10-16mm) or flat (30 x2mm) conductor or DIN rail
Protection rating	IP67
Compliance	EN 62561-6
Part Number	
LSC-A	790121
LSC-A/DIN	790122

Smart SPD Tester
SPT-203

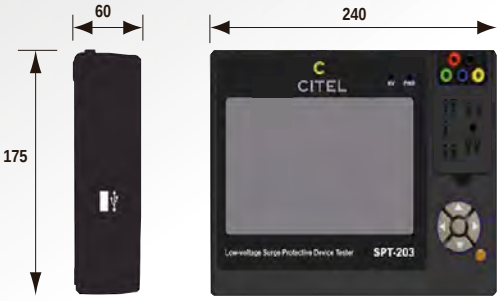

- **7-inch TFT display with touch-screen**
- **Testing the MOV, GDT and TVS components**
- **Automatically test and judge CITEL pluggable Surge Protectors**
- **Auto test mode and manual test mode**
- **Automatically save test data**
- **Database management**
- **Portable and convenient**

Characteristics

CITEL model	**SPT-203**
Charge voltage	AC 230 Vac single phase
Power	< 16 W
Voltage measurement error	+/- 2% (U < 200 V) +/- 1% (U > 200 V)
Leakage current measurement error	+/- 5%
MOV measurement	
1 mA voltage range	1 to 2000 V
Leakage current range	0 µA to 120 µA
GDT measurement	
DC spark voltage range	1 to 2000 V
TVS measurement	
Voltage range	0 to 500 V
Surge Protector measurement	
CITEL range : Automatic test of pluggable module	- AC Type 2/3 SPD: DS10, DS40, DS40VG, DS70R - AC compact Type 2/3 SPD : DS215, DS240, DS415,DS440 - AC Type 1/2 SPD: DS130R, DS130 VG - PV Type 2 SPD: DS50PV,DS50VGPV - Dataline SPD: DLA

LED medium intensity dual color
OBSTA FLASH LED series

- **Dual color medium intensity L865/L864 ICAO certified (STAC France) and FAA certified (Intertek)**
- **Modular design with Led projector less than 1kg**
- **High powered leds driven at low current levels for optimal lifetime**
- **Precise optical lens to reduce light pollution on the ground**
- **Luminous intensity independent from voltage variation**
- **Power supply in stainless cabinet with or without batteries**
- **Ready for option with wireless synchronization by GPS or optical cable**
- **Available with integrated or complete remote supply**

Characteristics

Part number	113723U	113724U	113725U	113727UI	113724UI	113725UI
	Flashhead with complete remote supply			Flashhead with integrated power supply		
Caracteristics	White only	Red only	Bi-color	White only	Red only	Bi-color
Power supply	120/230 Vac	120/230 Vac	120/230 Vac	120/230 Vac	120/230 Vac	120/230 Vac
Luminous intensity	Day : 20 000 Cd Night : 2000 Cd	Day : -- Night : 2000 Cd	Day : 20 000 Cd Night : 2000 Cd	Day : 20 000 Cd Night : 2000 Cd	Day : -- Night : 2000 Cd	Day : 20 000 Cd Night : 2000 Cd
Consumption max	55 W	8 W	55 W	55 W	8 W	55 W
Beam spread	Vertical : > 3 ° Horizontal : 360 °					
Flashes per minute	40					
Cable	113762LX: with x lenght of cable (113725U and 113723U versions)					
Surge protector	yes					

Also available in 120° et 180° version, please consult OBSTA catalog for futher informations

LED High intensity
OBSTAFlash HI

- **200 000 candelas during day time in white**
- **20 000 candelas during twilight in white,**
- **2000 candelas during the night white (red medium intensity type B or C in option),**
- **Rugged design**
- **Easy installation**

Characteristics

OBSTA	OBSTAFLASH HI
Power supply	230 Vac
Medium day consumption	162 W
Frequency	50/60 Hz
Luminous intensity	Day : 200 000 Cd Twilight : 20 000 Cd Night : 2000 Cd
Color	White
Flashes/minute	40
Beam spread	Vertical : >3° Horizontal : 360°

LED low intensity red fixed
NAVILITE series

- **Low intensity type A and B ICAO certified (STAC France) and FAA certified (NAVILITY HI only)**
- **One piece assembly completely molded providing excellent heat dissipation for optmum led performance and a perfect waterproofing**
- **Multiple leds driven at low currents levels for optimal lifetime wierd 4 by 4 in active redundancy**
- **110 VAC and 220 VAC power supply with robust transformer providing galvanic insulation and good reliabity**
- **Class 2 product, no grounding connection**

Characteristics

	NAVILITE 48 VDC	NAVILITE 24 VDC	NAVILITE 12 VDC	NAVILITE 12 VDC	NAVILITE 240 VAC
Part	113900	113901	113902	113903	113911 + 113905
Input voltage	48 VDC	24 VDC	12 VDC	12 VDC	240 V AC
Luminous intensity	> 32 candelas	> 33 candelas	> 32 candelas	> 10 candelas	> 32 candelas
Current drawn	125 mA	250 mA	500 mA	250 mA	70 mA
Power consumption	6 W	6 W	6 W	< 3 W	6 W
Lifetime	100 000 h.*	100 000 h.*	100 000 h.*	100 000 h*	100 000 h.*
Regulations	ICAO	ICAO	ICAO	OACI	ICAO

(*) : estimated lifetime (MTBF) given by LED manufacturer under certain conditions.
Options : Fixing bracket ; Box for one main and one back-up light with photocell and alarm indicator available in 48VDC and 240 VAC; Outdoor cable; Solar station.
Please consult OBSTA catalogue for futher information.

Cold neon discharge low intensity red fixed
OBSTA HI STI and STI

- **Low intensity type A and B ICAO certified (STAC France) and FAA certified (HI STI only)**
- **Combined with our lengthy experience in hostile environments (EMC, climate etc...), the principle of cold neon discharge lights gives a proven lifetime of decades on all types of obstacles, especially the radio towers, the transmission lines**
- **The exposure in high temperature environments does not affet their performance because cold neon discharge lights are not sensitive to temperature. Therefore their initial luminous intensity remains stable whatever is ambient temperature and duration of the lights**

Characteristics

OBSTA	HI STI	STI 48V	STIF 12 V	STIF 24 V
Part number	113110	113200	113410	113330
Characteristics	Monobloc	Monobloc	Monobloc	Monobloc
Input voltage	110 V AC to 240 V AC	48 VDC	12 VDC	24 VDC
Surge protection	Yes	Yes	Yes	Yes
Alarm indicator	Yes	Yes	Yes	Yes
Luminous intensity	> 35 candélas	> 10 candelas	> 10 candelas	> 35 candelas
Current drawn	370 up to 730 mA	250 mA	500 mA	750 mA
Power consumption	45 W	12 W	6 W	18 W
Life time	100 000 h.*	100 000 h.*	100 000 h.*	100 000 h.*
Regulations	ICAO and FAA	ICAO	ICAO	ICAO and FAA

(*) : lifetime based on 50 years experience in this technology.

Options : Fixing brackets ; Junction box and monitoring box ; Shielded cable ; Photocell 24V CC, 48V CC or 240V AC ; Battery cabinet; Solar station.

CITEL

Reliability in Surge Protection

Head office
CITEL-2CP
2, rue Troyon
92316 Sèvres CEDEX
France
Tel. : +33 1 41 23 50 23
Fax : +33 1 41 23 50 09
e-mail : contact@citel.fr
Web : www.citel.fr

Factory
CITEL-2CP
3 impasse de la Blanchisserie
BP 56
51052 Reims CEDEX
France
Tel. : +33 3 26 85 74 00
e-mail : contact@citel.fr

Germany
CITEL Electronics GmbH
Alleestrasse 144, Tor 5
D-44793 Bochum
Germany
Tel. : +49 234 54 72 10
Fax : +49 234 54 72 199
e-mail : info@citel.de
Web : www.citel.de

USA
CITEL Inc.
10108 USA Today Way
Miramar, FL33025
USA
Tel : (954) 430 6310
Fax : (954) 430 7785
e-mail : info@citel.us
Web site : www.citel.us

China
Shanghai Citel Electronics Co,Ltd
Sales department
Room 509, Building 1, n°88,
Shangke Road,
201315 Pudong, Shanghai
P.R. CHINA
Tel. : +86 21 58 12 25 25
Fax : +86 21 58 12 21 21
e-mail : info@citelsh.com
Web : www.citel.cn

Factory
499 Kang Yi Road
Kang Qiao Industrial Zone
201315 Pudong, Shanghai
P.R. CHINA
Tel. : +86 21 58 12 80 67

Russia
OOO CITEL VOSTOK
Yakovoapostolskiy pereulok 11/13,
building 4, office 4.
105064 Moscow, Russiaa
Tel. : +7 499 391 47 64
e-mail : info@citel.ru
Web : www.citel.ru

India
CITEL INDIA
305, DLF Courtyard
Plot No. A - 4, Saket District Centre
Saket, New Delhi - 110017
India
Tel. : +91 11 40018131
e-mail : indiacitel@gmail.com
Web : www.citel.in

Thailand
CITEL Thailand
Exchange Tower, Level 29,
Unit 2901-2904,
388 Sukhumvit Road, Klongtoey
Klongtoey, Bangkok 10110
Thailand
Tel. : +66 (0) 2 104 9214
Web : www.citel.fr